TITLE 17

ZONING

HARVARD MUNICIPAL CODE

1987

Published by

CITY OF HARVARD

<u>UPDATED</u>

January 1, 1993
December 10, 1993
May 17, 1994
January 9, 1995
February 7, 1995
November 21, 1995
February 20, 1996
June 18, 1996
July 16, 1996
February 4, 1997
December 16, 1997
January 20, 1998
March 3, 1998
July 7, 1998
January 19, 1999
September 28, 2000
May 6, 2003
March 10, 2004
April 21, 2004
February 9, 2005
November 9, 2005
May 9, 2006
July 10, 2007
February 11, 2008
September 9, 2008
January 13, 2009
September 8, 2009
September 28, 2010
April 10, 2012
October 22, 2013
June 24, 2014
December 16, 2014

STATE OF ILLINOIS)
COUNTY OF MCHENRY) SS
CITY OF HARVARD)

ORDINANCE NO. 87-134

AN ORDINANCE AMENDING TITLE 17 (ZONING) SO AS TO REPLACE SAME WITH A REVISED ORDINANCE PERTAINING TO ZONING, FENCES AND TRAILER PARKS

W-H-E-R-E-A-S

A. The City is authorized by state statute to establish zoning regulations (Section 11-13-1 et. seq. of Chapter 24 of the Illinois Revised Statutes); as well as regulations pertaining to fences (Section 11-30-1 et. seq. of said Chapter 24); of said Chapter 24) and trailer parks (Section 11-5-8 et. seq. of Chapter 111½), within the corporate boundaries.

B. The last enacted ordinances on such subjects require revisions to reflect current standards and to better serve the interests of the residents of the City of Harvard.

C. A new ordinance is, accordingly, now being adopted, which replaces entirely the ordinance now in existence covering such subjects.

D. All statutory provisions applicable to the consideration and passage of such new ordinance have been complied with.

NOW, THEREFORE, BE IT ORDAINED BY THE MAYOR AND CITY COUNCIL OF THE CITY OF HARVARD, MCHENRY COUNTY, ILLINOIS, THAT:

SECTION 1. Title 17 and all chapters, sections, and provisions thereof are deleted in their present form and are hereby amended to read as follows:

	TABLE OF CONTENTS	PAGE

17.04	Title	6
17.08	Title and Purpose	6-7
17.12	Comprehensive Plan	7
17.12.010	Interpretation	7
17.12.020	Objectives	8
17.12.030	Map Regulations	8
17.12.040	Changes and Amendments	8
17.12.050	Conformity to the Plan	8-9
17.12.060	Enforcement	9
17.16	Official Map	9
17.16.010	Adoption by Reference	9
17.16.020	Adoption of an Official Map	9
17.16.030	Adoption of Standards	9
17.16.040	Amendments: Procedures	10
17.16.050	Availability of Copies	10
17.16.060	Administration and Enforcement	10-11
17.16.070	Violation and Penalty	11
17.20	Use Districts	11
17.20.010	Scope of Regulations	11
17.20.020	Establishment of Districts	11
17.20.030	Agriculture Districts	11
17.20.040	Residential Districts	11-13
17.20.050	Business Districts	13-14
17.20.055	Business Park (B-P) Zoning District	14-16
17.20.058	Office (O) Zoning District	17
17.20.060	Manufacturing Districts	18+20
17.20.065	Technology Development Campus District	20-27
17.20.070	Zoning Maps	27-28
17.20.080	Lot Area, Yard and Bulk Regulations	28-29, 34
17.20.090	Minimal Standards--Residential Dwellings--Size--Appearance	34-35
17.20.100	Uses Permitted in Zoning Districts	35-53
17.20.110	Location of Buildings	54
17.20.120	Buildings Under Construction	54
17.20.130	Buildings on a Zoning Lot	54
17.20.140	Exceptions to District Regulations	54-56
17.20.150	Utility Exemption	56
17.20.160	Water and Sewer Facilities	56
17.24	Industrial Performance: General Regulations	56
17.24.010	Performance Standards	56-57
17.24.020	Permit Procedure	57
17.24.030	Prohibited Uses	57-58
17.24.040	Operations Within Enclosed Buildings	58
17.24.050	Performance Standards: General	58
17.24.060	Noise Standards	58-59

17.24.070	Vibration Standards	62-63
17.24.080	Smoke & Particulate Matter Standards	63-64
17.24.090	Toxic Matter Standards	64
17.24.100	Odor Standards	64
17.24.110	Fire & Explosion Hazard Standards	65+68
17.24.120	Glare Standards	68
17.24.130	Radiation Hazard Standards	68
17.24.140	Landscaping Standards	70
17.28	Flood Plain Regulations (Reference)	70
17.32	Off-Street Parking and Loading	70
17.32.010	Purpose	70
17.32.020	General Provisions: Parking and Loading	70-71
17.32.030	Design and Maintenance: Parking Spaces	71-73
17.32.040	Design and Maintenance: Loading Spaces	74
17.32.050	Required Number of Parking Spaces	74-77
17.32.060	Required Number of Loading Spaces	78
17.32.070	Sign Regulations (Reference)	78
17.36	Accessory Uses	78
17.36.010	Uses Permitted as Accessory Uses	78
17.36.020	Location of Accessory Uses	79
17.36.030	Construction of Accessory Buildings	79
17.36.040	Regulations for Specific Accessory Uses	79-81
17.36.050	Size of Accessory Use	81-82
17.40	Temporary Uses	82
17.40.010	Application	82
17.40.020	Uses Permitted as Temporary Uses	82-83
17.44	Conditional Uses	83
17.44.010	Purpose	83
17.44.020	Location	83
17.44.030	Standards for All Conditional Uses	83-84
17.44.035	Compliance and Revocation	84
17.44.040	Application	84-85
17.44.050	Standards for Specific Conditional Uses	85
17.44.051	Airports and Heliports	85
17.44.052	Cemetery	85-86
17.44.053	Drive-in, Summer, Amphitheater	86
17.44.054	Extraction of Earth Products	87-89
17.44.055	Planned Developments	89-96
17.44.056		
17.44.057	Adult Business	96-97
17.44.060	Public & Private Utilities and Service	97
17.44.064	Nonresidential Parking Lot	97-98
17.44.068		
17.44.072	Apartments Above 1st Floor Business Uses	98-99

17.48	Non-Conforming Lots, Structures and Uses	99
17.48.010	Purpose and Intent	99
17.48.020		
17.48.030	Non-Conforming Structures Constructed on Stone, Masonry or Concrete Foundation (CCF)	99-101
17.48.035	Non-Conforming Building or Structure	101-102
17.48.040	Non-Conforming Uses	102-104
17.48.050	Non-Conforming Accessory Uses	104
17.48.060	Non-Conforming Residential Uses	104
17.48.070		
17.52	Administration and Enforcement	104
17.52.010	Zoning Officer	104-107
17.52.020	Zoning Board of Appeals	107-112
17.52.030	Plan Commission	112-113
17.52.040	Variations	113-114
17.52.050	Appeals	114
17.52.060	Amendments	114-115
17.52.070	Conditional Uses	115
17.56	Definitions	115-126
17.60	Fees	126
17.70	Violations and Penalties	126
17.80	Severability	126
17.90	Repeal	126
17.100	Effective Date	126
17.110	Fence Ordinance	127
17.110.010	Purpose	127
17.110.020	Definitions	127
17.110.030	Open Fences	127-128
17.110.040	Solid Fences	128
17.110.050	Variations	128
17.110.060	Restrictions	129
17.130	Mobile Home Park Regulations	129
17.130.010	Purpose	129
17.130.020	Definitions	129-130
17.130.030	Inspections - Enforcement	130
17.130.040	Permit - Required	130
17.130.050	Permit Application; Fee	130
17.130.060	Compliance with Zoning Regulations	131
17.130.070	Mobile Homes in Mobile Home Parks Only	131
17.130.080	Compliance with State Statutes Required	131
17.130.090	Regulations	131-133
17.130.100	Mobile Home Park Master Plan	133-134
17.130.110	Amortization Schedule	134-135
17.130.120	Penalty	135

LIST OF PLATES

NUMBER	PAGE
1. Yard and Building Lines	19
2. Lot Coverage and Floor Area Ratio (FAR)	30-31
3. Building Heights	32
4. Types of Lots	122
5. Lot Depth and Width	123

LIST OF TABLES

NUMBER		PAGE
1.	Proposed Lot Area, Yard and Bulk Regulations	33
2.	Lot Area Requirements for Particular Uses (Deleted Ord. 2009-102)	
3.	Uses Permitted in Zoning Districts	35-53
4.	Maximum Permitted Sound Levels: M-1 District	60
5.	Maximum Permitted Sound Levels: M-2 District	61
6.	Values of K to be Used in Vibrating Formula: M-1 District	62
7.	Values of K to be Used in Vibrating Formula: M-2 District	63
8.	Storage of Flammable Materials in the M-1 District	66
9.	Storage of Flammable Materials in the M-2 District	67
10.	Quantities of Radioactive Materials	69
11.	Required Number of Parking Spaces	76
12.	Required Number of Loading Spaces	77
13.	Basic Density Permitted in Planned Developments	92

TITLE
Chapter 17.04

This Ordinance through Chapter 17.100 shall be known, cited and referred to as the "Harvard Zoning Ordinance". Chapter 17.110 being referred to as the "Fence Ordinance"; Chapter 17.130 being referred to as the "Trailer Park Ordinance" and 17.140 being referred to as "Occupancy Restrictions". (Ord. 89-114, 1989; Ord. 87-134, 1987)

Chapter 17.08
INTENT AND PURPOSE

This Ordinance is adopted for the following purposes:

A. To promote and protect the public health, safety, morals, comfort, and general welfare of the people.

B. To divide the City of Harvard into zoning districts, restricting and regulating therein location, erection, construction, reconstruction, alteration and the use of buildings, structures and land for residence, business and manufacturing and other specified uses.

C. To provide a quality community environment developed in accordance with the goals, objectives, ordinances, policies and recommendations of the Official Plan of Harvard and all the applicable ordinances of the City.

D. To protect the character and stability of agricultural, residential, recreational, business and manufacturing areas within the City of Harvard and to promote the orderly and beneficial development of such areas.

E. To protect and provide for the orderly development of natural resources including the resources of the air, lakes and streams and land.

F. To preserve a high quality natural environment, including surface and subsurface water resources, their recharge areas, scenic vistas, and woodlands and wildlife habitat for the health and enjoyment of the people of Harvard.

G. To insure adequate light, air, privacy and convenience of access to property.

H. To regulate the intensity of use of lot areas and to determine the area of open spaces surrounding buildings necessary to insure adequate light and air and to protect the public health, comfort, safety and general welfare.

I. To establish building lines and the location of buildings designed for residential, business, manufacturing or other uses within such areas.

J. To fix reasonable standards to which buildings and structures shall conform therein.

K. To prohibit uses, buildings, structures and vehicles incompatible with the limitations of natural site conditions, the character of development, or intended uses within specific zoning districts.

L. To prevent additions, alterations, or remodeling of existing buildings and structures in such a way as to avoid the restrictions and limitations imposed thereunder.

M. To prevent congestion in the public streets and protect the public health, safety, convenience and general welfare by providing for the off-street parking of motor vehicles and the loading and unloading of commercial vehicles.

N. To protect against fire, explosion, noxious fumes and other hazards in the interest of the public health, safety, comfort and general welfare.

O. To prevent the overcrowding of land and undue concentration of structures, so far as is possible and appropriate, in each district by regulating the use and bulk of buildings in relation to the land surrounding them.

P. To conserve the taxable value of land and buildings throughout the City of Harvard.

Q. To provide for the elimination of nonconforming uses of land, buildings and structures which are adversely affecting the character and value of desirable development in each district.

R. To define and limit the powers and duties of the administrative officers and bodies as provided therein.

S. To provide for separation of pedestrian and vehicular movement and provide for bicycle paths as follows: To promote good planning with the separation of pedestrian and vehicular movements, providing sensitive solutions to difficult site problems where soils, slopes, woodlands or wetlands place constraints on development, and by providing convenient recreational facilities and open spaces to enrich the lifestyle of the residents of the community.

Chapter 17.12
COMPREHENSIVE PLAN

A comprehensive plan of public improvement looking to the present and future development of the City, which plan has been prepared by the Planning Commission of the City, in conjunction with Carl L. Gardner and Associates, Planning Consultants, of Chicago, Illinois, and which was revised by the Planning Commission in conjunction with Associated Planner, City Planning Consultants of Woodstock, Illinois, has heretofore been adopted on 2-21-83 (Ordinance No. 83-103) and is by this reference incorporated herein. (Ord. 87-134, 1987)

17.12.010 Interpretation

In interpreting and applying the provisions of this chapter such provisions shall in every instance be held to be the minimum reasonable requirements adopted for the promotion of public health, safety, comfort, convenience, morals, and welfare. (Ord. 87-134, 1987)

17.12.020 Objectives

The official plan as herein adopted includes and recognizes the following objectives:

A. That the character of the City and its environs as essentially a residential community be maintained, with commercial and industrial enterprises permitted in order to maintain a proper balance of property valuations;

B. That for the promotion of the public health, safety and convenience and for the attainment of reasonable and practical utility and attractiveness, and for the maintenance and protection of property values, all future developments in the City an its environs shall provide:

1. That adequate street lighting, water supply, sanitary and drainage facilities be constructed and maintained;

2. That highways, streets and sidewalks be of adequate width and be so constructed and maintained as to avoid the creation of hazardous conditions;

3. That railroad crossings and grade separations be constructed and maintained to provide adequate public safety and convenience;

4. That the landscaping of public and private areas be controlled to avoid the creation of hazardous conditions.

5. That the locations and architectural design, where applicable, of public buildings, parks, schools, recreational facilities, and parking areas be controlled in accordance with the best of public interest. (Ord. 87-134, 1987)

17.12.030 Map and Regulations

The official plan as herewith adopted includes the following:

A. The official planning map of the City adopted February 21, 1983.

B. "The Municipal Code of the City of Harvard of 1981 Title 16 thereof as amended."

C. The Harvard Zoning Ordinance. (Ord. 87-134, 1987)

17.12.040 Changes and Amendments

The Planning Commission may from time to time recommend to the Mayor and the City Council such changes in the official plan as may be deemed necessary by the Mayor and the City Council or by the Planning Commission. Such changes shall become part of the official plan after their approval by the Planning Commission and their adoption by the Mayor and the City Council as amendments to this chapter. (Ord. 87-134, 1987)

17.12.050 Conformity to the Plan

After the passage of the ordinance codified in this chapter, no map or plat of any subdivision

presented for record, affecting land within the corporate limits of the City or the contiguous territory not more than one and one-half miles from such limits and not included in any municipality, shall be entitled to record or shall be valid unless the subdivision thereon shown conforms with the requirements of the official plan. (Ord. 87-134, 1987)

17.12.060 Enforcement

It shall be the duty of the enforcing officer to enforce the requirements of the official plan and to call upon any other departments or officials of the City to furnish him with such information or assistance as he may require for the observance or enforcement of this chapter. It shall be the duty of such other departments to furnish such information or assistance whenever requested. (Ord. 87-134, 1987)

CHAPTER 17.16
OFFICIAL MAP

It is the purpose of this chapter to adopt and designate an official map or maps or parts thereof as prepared and amended by the Planning Commission of the City in conjunction with Carl Gardner & Associates and as amended by the City in conjunction with Associated Planners, City Planning consultants, Woodstock, Illinois, and to adopt and designate other standards governing the future development and redevelopment of the City, thereby implementing the official comprehensive plan of the City, and to further provide for the filing of copies of such map or maps and standards in the office of the City Clerk of the City. (Ord. 87-134, 1987)

17.16.010 Adoption by Reference

Previously printed maps and standards adopted as a part of this chapter or an amendment thereof by reference to their title shall be identified by the following statement, either marked or stamped thereon: "Adopted by reference as part of the official map ordinance of the City of Harvard, McHenry County, Illinois, (Ord. 87-134, 1987)"

17.16.020 Adoption of an Official Map

The map or maps of the corporate area and the contiguous unincorporated area, or geographic or functional parts thereof, described herein are adopted and designated as the official map or parts thereof of this municipality. Such maps show certain existing and proposed rights-of-way of streets, alleys and other public ways, streams, stormwater drainage channels and sewers and sanitary sewage, and sites of parks, schools and other public grounds. No proposed park site or school or other public ground shall be shown on the official map unless the school district or other public agency whose present and future need that the site is intended to meet, takes official action approving the approximate location and the extent of the site and expressing the agencies intent to acquire this site within a reasonable period of time. In the case of unsubdivided acreage, acquisition should take place at or before the time the land is subdivided. Ord 87-134, 1987)

17.16.030 Adoption of Standards

The standards and specifications contained in "The Harvard Zoning Ordinance" in Ordinance No. 841, pertaining to subdivisions, and Ordinance No. 779 relating to industrial waste and all other ordinances and regulations heretofore existing and hereafter existing in the City with reference to the construction of walks and pavements, parking areas, driveways, streets, sanitary sewerage, stormwater drainage, floodwater runoff channels, culverts, bridge openings, detention ponds and basins, water supply, fire hydrants, gas, electric and telephone utilities, street lighting, street name signs, and trees and tree banks are adopted and incorporated in this title by reference, without further filing or publication except where statutes ordinarily require by law. (Ord. 87-134, 1987)

17.16.040 Amendments - Procedure

A. Either the Planning Commission or the City Council of the City may initiate or originate proposed amendments to the official map, including such previously printed maps and standards this chapter has adopted by reference.

B. A proposed amendment initiated by the City Council shall be referred to the Planning Commission for consideration and recommendation therein. The City Council may require the Planning Commission to return its recommendation within ninety days of the date of submission. If not so returned, the City Council may proceed with arrangements for the holding of a public hearing on the proposed amendment and its adoption in the same manner as if the Planning Commission had made its recommendation.

C. The City Council, upon receipt of a proposed amendment or a recommendation from the Planning Commission, shall schedule a public hearing thereon before either the City Council or the Planning Commission. Not less than fifteen days notice of the time and place of the hearing shall be given by publication in a newspaper of general circulation in the City, or in the county in which the unincorporated land affected by the proposed amending ordinance is located. At least three copies of the proposed ordinance and any maps or standards that would adopt by reference shall be placed on file in the office of the Municipal Clerk at least fifteen days before the hearing. The notice shall state the hours during which the filed copies will be available for examination by interested persons.

D. The hearing shall be informal. The proponents and opponents of the proposed amendment shall be given an opportunity to be heard. Their statements may be made orally, be submitted in writing, or both. The hearing, if not concluded, may be recessed to a time and place announced at the hearing or stated later in a notice published in a newspaper not less than five days before the recessed or adjourned date.

E. The City Council shall consider the views expressed and the information derived from the hearing along with the recommendation of the Planning Commission, and, within ninety days after the conclusion of the hearing, shall either adopt the amending ordinance in whole or in part or reject it. If within ninety days no formal action is taken by the city council on the amendment it may not thereafter act on the amendment without again complying with the requirements of notice and hearing specified in subsections C and D of this section. (Ord. 87-134, 1987)

17.16.050 Availability of Copies

The Municipal Clerk shall keep on file in the City offices at least three copies of the ordinance codified in this chapter, including such maps and standards as this chapter adopts by reference and any amendment thereof for inspection by interested persons. The Clerk shall also make available copies for purchase at cost, either through duplication in advance of contemplated demand, or upon order as required. The foregoing copies of the ordinance codified in this chapter shall be in addition to the original copy which the statutes require the Clerk to keep as part of his official record of enacted ordinances. (Ord. 87-134)

17.16.060 Administration and Enforcement

The provisions of this chapter, including the maps and standards the chapter adopts by reference which are incorporated by reference in other regulatory ordinances shall be administered and enforced by the officers designated in such regulatory ordinances. Those provisions of this chapter not incorporated in other ordinances shall be enforced by the Planning Commission. (Ord. 87-134)

17.16.070 Violation--Penalty

Any violator of the provisions of this chapter shall be fined not less than five dollars nor more than five hundred dollars. Each day a violation is committed or is permitted to continue shall constitute a separate offense. (Ord. 87-134, 1987)

CHAPTER 17.20
USE DISTRICTS

17.20.010 Scope of Regulations

No building or structure shall be erected, converted, enlarged, reconstructed or structurally altered, nor shall any building or land be used for any purpose other than is permitted in the district in which the building or land is located. (Ord 87-134, 1987)

17.20.020 Establishment of Districts

In order to carry out the purposes and provisions of this Ordinance, the City of Harvard, Illinois is hereby divided into the following districts: (Ord 87-134, 1987)

17.20.030 Agriculture District

A. Purpose: The Agriculture District is to provide an area where agricultural activities and related uses may be located. This precludes the location of small tract subdivisions in this district. Should any but large tracts home sites be desired, first a change in zoning would be required. Areas included in the agriculture district are characterized by large tracts and prime soil conditions. Areas so classified are suitable for agriculture uses which cannot be sustained on poor soils or on small tracts. Rural subdivisions and traditional property splits are regulated by these provisions to reduce the haphazard placement of more intense residential densities in or near productive agricultural areas. This is intended to preserve areas which are best suited for agricultural purposes.

B. The following agriculture district is established: A-Agriculture District (Ord. 87-134)

17.20.040 Residential Districts

A. Purpose

The residential district regulations set forth are established in order to protect public health and the environment, and promote public safety, convenience, comfort, morals, prosperity and welfare. These general goals include, among others, the following specific purposes:

1. To protect against fire, explosion, noxious fumes, offensive odors, noise, smoke, vibrations, dust, heat, glare, visual nuisances, and other objectionable factors.

2. To protect against unduly heavy vehicle traffic, especially through traffic, and to alleviate congestion by promoting off-street parking.

3. To protect against undue congestion of public streets and other public facilities by controlling density of population through regulation of the bulk of buildings.

4. To provide for ample light and air to buildings and the windows thereof.

5. To provide for usable open space on the same zoning lot with the building improvements; including such provisions as zero lot line or cluster developments following planned development procedures.

6. To provide sufficient space in proper locations to meet the probable need for necessary and desirable services in the vicinity of residences which increase safety and amenity but which do not exert objectionable influences.

7. To promote best use and development of residential land in accordance with a comprehensive land use plan, to promote stability of residential development and protect the character of desirable development and protect the value of land and improvements and so strengthen the economic base of the City.

B. The following Residential Districts are established:
R-1A Single Family Residence District
R-1B Single Family Residence District (Ordinance 2005-104 §1, 2005);
R-1 Single Family Residence District
R-2 Single Family Residence District
R-3 Single Family Residence District (Ord. 89-140, §1, 1989, Ord. 87-134, 1987)
R-55 Residential Zoning District (Ord. 98-136,§2,1998)
R-T Townhouse Residence District (Ord. 2004-108,§1)

C. R-1B Single family zoning district shall only provide for the appropriate zoning of land which was classified R-1B Single family dwelling district prior to November 21, 1994. (Ord. 94-152, §1, 1994)

D. Development Regulations, R-55 Residential Zoning District ("R-55 District"): (Ord. 98-136,§3-D.1-5,1998)

1. Any development in the R-55 District shall comply with the Federal Fair Housing Act exemption relating to Housing for Older Persons, 42 U.S.C. 3607, et seq., as amended ("Act").

2. Any development in the R-55 District shall not be construed or interpreted to include ambulatory care facilities, nursing homes or sheltered care.

3. Prior to any development in the R-55 District, the required petition to reclassify the property shall be filed before the Zoning Commission to obtain City Council approval by ordinance and provide detailed procedures, rules and regulations evidencing compliance with the Act's exemption relating to housing for older persons. Continual compliance with the Act's requirements exempting housing for older persons shall be

required of all housing occupants in the R-55 District.

4. At the City Council's direction, the petitioner shall file a site plan of the proposed development with such detail as the City Council shall specify.

5. Except as provided herein, all persons living in the R-55 District must be aged 55 years or older. In the event a person is married, one spouse may be under 55 years of age. Property ownership is not limited to persons aged 55 years or older.

17.20.050 Business Districts

A. Purpose

The business district regulations set forth herein are established to protect public health and the environment, to promote public safety, comfort, convenience and the general welfare and to protect the economic base of the City and value of property. These general objectives include, among others, the following specific purposes:

1. To promote the most desirable use of land in accordance with a well-considered plan so that adequate space is provided in appropriate locations for the various types of business uses, thereby protecting and strengthening the economic base of the City.

2. To place in separate districts those businesses which may create noise, odors, hazards, unsightliness or which may generate heavy traffic; in accordance with the intent of the comprehensive plan.

3. To permit selected business uses in districts where adjacency to or inclusion in a residential area has sufficient elements of service or convenience to such areas to offset the disadvantages.

4. To encourage the grouping in appropriate locations of compatible business uses which will tend to draw trade that is mutually interchangeable and so promote public convenience and business prosperity and contribute to the alleviation of traffic and pedestrian congestion.

5. To provide for the establishment of off-street parking facilities -- permitted and required -- so as to alleviate traffic congestion and so promote shopping convenience and business prosperity.

6. To provide for the further development and expansion of the Central Business District and the redevelopment of surrounding areas with a compatible mixture of residential and restricted business uses.

B. The following business Districts are established:

B-1 Neighborhood Convenience District
B-2 Central Business District
B-3 Commercial District
B-4 Commercial Recreation District (Ord. 87-134, 1987)

C. Intent of Zoning Districts

1. B-2 Central Business District: This zoning district is intended to provide appropriate standards in the City's older central business areas and to reflect and project the existing character of those areas. (Ord. 96-150,§2,1996)

2. B-3 Commercial District: This zoning district is intended to provide a wide array of goods and services to the City and surrounding areas. The district will provide a large amount of facilities, stores and services and provide for a broad base of commercial users and services. (Ord. 96-150,§2,1996)

3. B-4 Commercial District: This zoning district is intended to provide commercial recreation in centralized and highly accessible locations that serve the entire City and surrounding areas, as well as agricultural uses in less urban areas of the City. (Ord. 96-150,§2,1996)

17.20.055 Business Park (B-P) Zoning District

A. Purpose

The Business Park (B-P) Zoning District set forth herein is established to protect and enhance public health, safety, comfort, convenience and the general welfare and to protect and enhance the economic base of the City by regulating business, commerce and industry in appropriate locations. It is, therefore, the policy and the intent and purpose of this ordinance:

1. To foster the City's business, commerce and industry base and to promote and maintain the City's economy for the general health and welfare of its citizens;

2. To create business parks and to encourage business expansion, modernization while creating business areas which are suitable in size, location and character;

3. To designate specific business park districts of 75 or more contiguous acres in order for the City to better plan, develop and direct programs and initiatives to promote growth and development; and

4. To regulate architectural standards in order to promote, encourage and maintain sound economic policies as it relates to property values.

B. Minimum Bulk Requirements

The lot area, yard and bulk regulations for the B-P Zoning District are found in Table 1 of Section 17.20.080 of this Code.

C. Permitted Uses

Permitted uses in the B-P Zoning District are found in Table 3 of Section 17.20.100 of this Code.

D. Lighting Guidelines

Lighting in the B-P Zoning District shall be designed to achieve the following objectives:

1. To contribute to the safe and efficient use of a development site.

2. To contribute to the site security.

3. To compliment and reinforce the architecture and site design character.

4. To keep on site parking lot lighting fixtures and illumination levels consistent throughout the park.

5. To prevent casting glare onto adjacent lots and streets.

6. To encourage conformity with energy-saving guidelines.

7. Architecturally, to articulate and animate the particular building design, as well as provide the required functional lighting for safety and clarity of pedestrian movement.

   Building and Zoning office approval of the lighting plans and specifications must be procured prior to construction of a building on a building site.

E. Landscape Requirements

1. To ensure unified building sites and their architecture in the B-P Zoning District, landscaping as a design element will play the key role in creating and conveying the park like working environment.

2. The purpose of the requirements in this section is to provide for appropriate landscaping and screening of parking and other outdoor areas that will:

   a. Protect residential environments from effects of more intensive adjacent uses.

   b. Protect users of parking areas from excessive wind glare and temperature extremes.

   c. Reduce the adverse effects on public streets and adjacent properties of noise, blowing dust, debris, and motor vehicle headlight glare.

   d. Contribute to improved community appearances and maintenance of property values.

3. City approval of the landscaping plans and specifications must be procured prior to construction of a building on a building site.

4. Landscaping must be completed within 60 days of occupancy unless weather and ground conditions do not permit, or unless the City grants written permission for an extension of the completion date.

5. Sizes of Minimum Plant Materials

a. Shade trees: A deciduous tree with a minimum caliper of three inches.

b. Conifer: A coniferous tree with a minimum six foot height.

c. Ornamental: A deciduous tree or large shrub with a minimum caliper of two inches or minimum height of six feet.

F. Curbing

All parking island strips and parking screening strips in the B-P Zoning District shall be separated on all sides from the parking surface by curbing.

G. Building Exterior Wall Materials

1. For a building of less than 20,000 square feet, the front exterior wall shall be defined as the closest wall to the most major street the property adjoins and shall be of face brick, stone, glass or architectural precast concrete panels. The side exterior walls may be of metal except that the lower third or lower seven feet, whichever is less, of the wall shall be of masonry, stone, glass or architectural precast panels. Provided, however, drivet material shall not exceed 20 percent of the exterior facade and may only be used for architectural detail.

2. For buildings of more than 20,000 square feet, the same restrictions as above shall apply, except that the lower four feet of the side exterior wall shall be of masonry, stone or architectural precast concrete panels.

3. Except for decorative blocks, all concrete blocks are specifically prohibited on any exterior surface of a building.

4. One dominant material should be selected and expressed with its own natural integrity. Materials which convey permanence, substance, timelessness and restraint are required.

5. Low maintenance should be a major consideration.

6. Materials shall blend with those existing in the adjacent area of the center.

H. Color and Texture

1. Simple and uniform texture patterns are encouraged to create shadow patterns which will reduce the high visibility of the building.

2. Variations in color shall be kept to a minimum.

3. Colors shall be subdued in tone.

4. Accent colors may be used to express corporate identity.

I. Building Roofs

1. In instances where flat roof areas can be viewed from above, care shall be taken that all roof vents, roof mounted mechanical equipment, pipes, etc., are grouped together

and painted to match roof color, to reduce their appearance.

2. Mechanical equipment screening: All roof mounted mechanical equipment should be screened from view by parapet walls or screening. Screens should be attractive in appearance and reflect or compliment the architecture of the building to which they belong. All screening shall be the height of the mechanical equipment, at a minimum. Consideration will be given to the view plane of adjacent developments.

J. Refuse Enclosures

All refuse enclosures shall be constructed of the same material as the building, contain latchable gates and not exceed six feet in height.

K. Loading Docks

Loading docks shall only be permitted in the side or rear yards.

17.20.058 Office (O) Zoning District

A. Purpose

The Office (O) Zoning District set forth herein is established to protect public health, to promote public safety, comfort, convenience and the general welfare and to protect the economic base of the City and the value of property. These general purposes include, among others, the following specific objectives:

1. To promote the most desirable use of land in accordance with a well considered plan so that adequate space is provided in appropriate locations for the various types of business uses, thereby protecting and strengthening the economic base of the City.

2. To permit selected business uses in a district where adjacent to or inclusion in a residential area has sufficient elements of service or convenience to such areas to offset any disadvantage.

3. To encourage the grouping in appropriate locations of compatible business uses which will tend to draw trade that is mutually interchangeable and so promote public convenience and business prosperity and contribute to the alleviation of traffic and pedestrian congestion.

4. To provide for the establishment of off-street parking facilities, permitted and required, so as to alleviate traffic congestion and so promote business prosperity.

B. Minimum Bulk Requirements

The lot area, yard and bulk regulations for the O Zoning District are found in Table 1 of Section 17.20.080 of this Code.

C. Permitted Uses

Permitted uses in the O Zoning District are found in Table 3 of Section 17.20.100 of this Code.

D. Refuse Enclosures

All refuse enclosures shall be constructed of the same material as the building, containing latchable gates and not exceed six feet in height.

17.20.060 Manufacturing Districts

A. Purposes

The manufacturing districts set forth herein are established to protect public health, safety, comfort, convenience and the general welfare, and to protect the environment and the economic base of the City, as well as the value of real estate, by regulating manufacturing development in appropriate locations, recognize prevailing wind patterns. These general objectives include, among others, the following specific objectives:

1. To protect established residential areas, and the health of families living therein, by restricting those nearby manufacturing activities which may create offensive noise, vibration, smoke, dust, odors, heat, glare, fire hazards, excessive traffic and other objectionable influences to those areas which are appropriate therefor.

2. To provide adequate space in appropriate locations for most types of manufacturing and related activities so that the economic structure of the community may be strengthened, and that employment opportunities may be found in the interest of public prosperity and welfare.

3. To provide space for manufacturing activities in locations accessible to rail and highways, so that movement of raw materials, finished products, and employees can be carried on efficiently and with a minimum danger to public life and property.

4. To establish proper standards of performance which will restrict obnoxious manufacturing activities while, at the same time, encourage and permit the manufacturing activities which have adopted facilities for the processing of finished products without adversely affecting the health, happiness, safety, convenience and welfare of the people living and working in nearby areas.

5. To protect manufacturing districts from incompatible uses of land by prohibiting the use of such space for new residential development, thereby preserving the land for a more appropriate use in accordance with the plans for City improvement and development.

PLATE 1

YARD AND BUILDING LINES

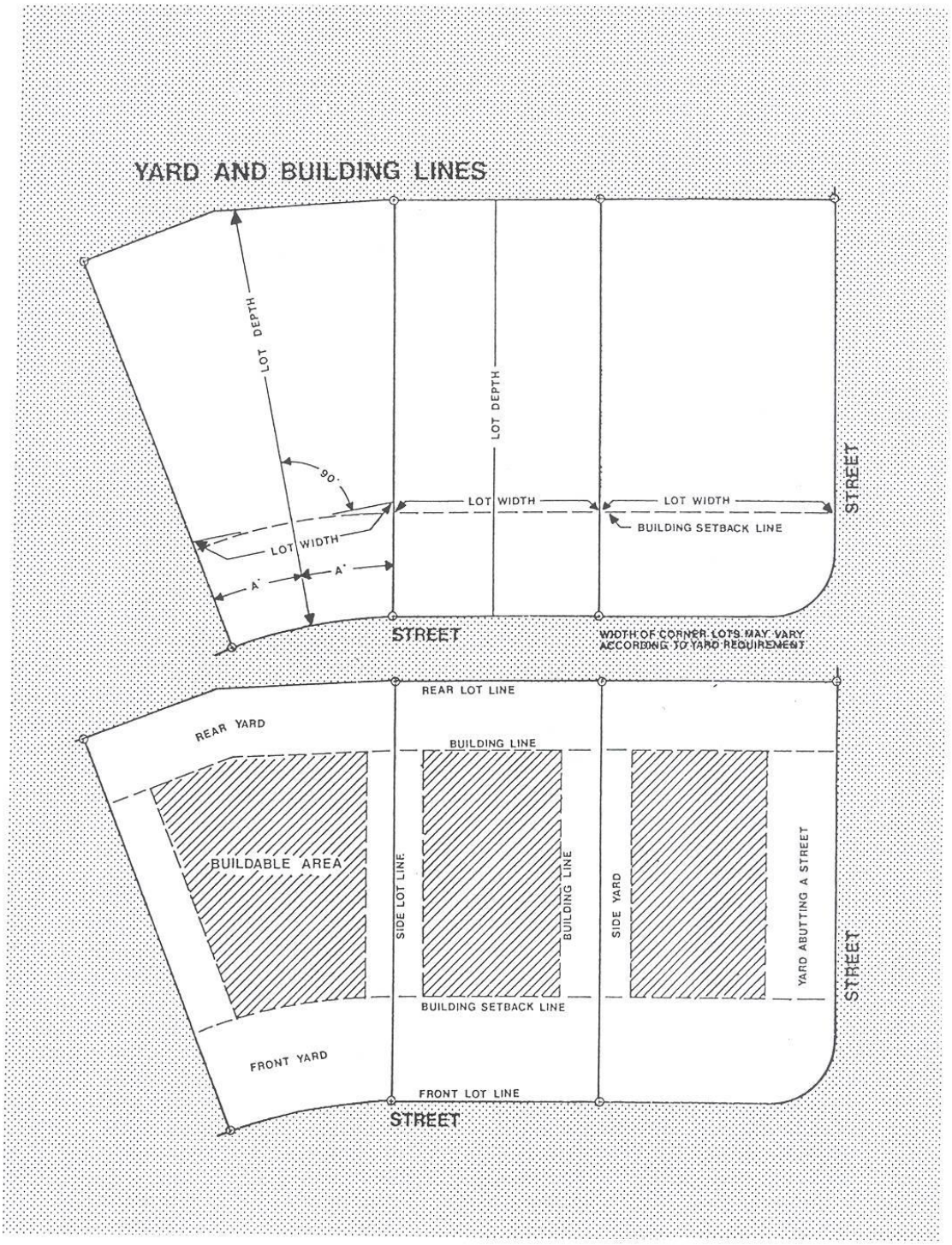

FOR ILLUSTRATIVE PURPOSES ONLY. THIS IS NOT A PART OF THE ZONING ORDINANCE. THE REGULATIONS OF THE ZONING ORDINANCE GOVERN IN ALL CASES.

6. To promote the most desirable use of land in accordance with a well-considered plan of land use for all of the City, to conserve the use of property, to promote stability of manufacturing activities and related development, and to protect the character and established development in each area of the community, to enhance and stabilize the value of land and to protect the tax base of the City.

B. The following Manufacturing Districts are established:
M-1 Manufacturing District
M-2 Manufacturing District

17.20.065 Technology Development Campus

A. Purpose.
The Technology Development Campus District set forth herein is established to protect and enhance public health, safety, comfort, convenience and the general welfare and to protect and enhance the economic base of the City by regulating technology and industrial development in appropriate locations. It is, therefore, the policy of the City and the intent and purpose of this ordinance:

1. to foster the City's industrial, technological and manufacturing base and to promote and maintain the City's economy for the general health and welfare of its citizens;

2. to create manufacturing, industrial and technology areas which are suitable in size, location and character and which the City Council deems may benefit from designation;

3. to encourage technological and industrial investment, modernization and expansion by providing for stable, flexible and predictable industrial environments that successfully integrate and provide for the requirements of industrial entities and the employees of such entities;

4. to designate specific technology development districts of two-hundred fifty (250) or more contiguous acres in order for the City to better plan, develop and direct programs and initiatives to promote growth and development; and,

5. to encourage the designation of districts to be known as "Technology Development Campus Districts" to promote the purposes of this ordinance.

B. Rules of Construction.

1. Where any provision of this Section is either more or less restrictive than any comparable provisions concerning the same subject matter under the City's Zoning Ordinance, the provisions of this Section shall govern.

2. In their interpretation and application, the provisions of this Section shall be held to be the minimum requirements for the promotion of the public health, safety and welfare and to accomplish the purposes of the ordinance.

3. Property located within any Technology Development Campus District shall be

subject to the applicable provisions of the Zoning Ordinance, except where they are in conflict with the purposes of this Section. In the case of such a conflict, the provisions of this Section shall govern.

C. Definitions.

Wherever used in this Section, the following words shall have the following meanings unless the context clearly indicates otherwise:

1. "Administrator" shall mean the Administrator for the City of Harvard.

2. "Technology Development Campus District" means a district of two-hundred fifty (250) or more acres that is designated by the City Council in accordance with City Zoning Ordinance. For the purposes of this Section, measurements of acreage shall apply to land which is contiguous or would be contiguous except for separation by a public way or a railroad right of way.

3. "City" shall mean the City of Harvard, McHenry County, Illinois.

4. "City Council" shall mean the city council of the City.

5. "Site" shall mean the land area owned and controlled (or subject to a purchase contract) by a single entity and designated by the City Council as a Technology Development Campus District.

6. "Zoning Ordinance" shall mean the City Zoning Ordinance, Title 17 of the Municipal Code of the City.

D. Eligibility.

Any area of two-hundred fifty (250) or more contiguous acres owned and controlled (or subject to a purchase contract) by a single entity shall be eligible for designation as a Technology Campus District by the City Council.

E. Designation of Technology Development Campus District.

The following Technology Development Campus District is hereby designated: TDC-1 Technology Development Campus District.

F. Permitted Uses.

The following are permitted uses in the TDC-1 District:

1. Primary Uses

(a) Manufacturing, including any production, assembly, processing, cleaning, servicing, testing, repair, or storage of material, goods or products.

(b) Administrative, Employment, Professional and Business Offices.

(c) Research, Experimental and Engineering laboratories or facilities devoted to basic research, engineering or product development.

(d) Warehouse, Storage, Distribution, Loading and Parking Facilities.

2. Secondary Uses

The secondary uses enumerated herein are intended to support the primary uses and make certain services available to the employees of, the families of such employees and business visitors to the primary uses. The following secondary uses which may be attached or detached to a primary use are permitted, but only if (i) they are in conjunction with a primary use conducted within the same TDC-1 District; and (ii) they are related to the general operations of the entity conducting such primary use.

(a) Cafeterias which are open only to persons employed by the entity operating a primary use and business visitors to such use.

(b) Off-Street parking and loading facilities for all primary and secondary uses on the Site.

(c) Recreation, Fitness, Athletic and Health facilities and offices related thereto all to be used solely by persons employed by the entity operating a primary use, the families of such persons and business visitors to such use.

(d) Living Quarters for custodians, gardeners, maintenance personnel and caretakers of facilities on the Site.

(e) Guest and Living Quarters to be used only for the temporary accommodation of employees assigned by the entity operating a primary use to work temporarily on the Site and by business visitors to such use; provided, however, that not more than two (2) guest/living facilities, each not to exceed 5,000 square feet, shall be permitted in a TDC-1 District.

(f) Facilities for custodial, gardening, maintenance, and caretaker services for the building, structures and grounds on the Site.

(g) Educational facilities to be used solely by persons employed by the entity operating a primary use, the families of such persons and business visitors to such use.

(h) Child Day Care Centers and Nurseries to be used solely by persons employed on the Site, the families of such persons and business visitors to the primary use.

(i) Dry Cleaning to be used solely by persons employed by the entity operating a primary use and business visitors to such use, providing processing is done off-Site.

(j) Grocery Store, convenience; Shoe Repair Store; and uses limited in nature to provide on-Site personal services; provided, however, that such uses shall only be available to persons employed by the entity operating a primary use and business visitors to such use and in no event shall such uses be open to the general public.

(k) Vehicle repair; provided, however, such repair is limited to vehicles owned or

controlled by the entity operating a primary use.

(l) Blueprint, Photostat Shop to be used solely by persons employed by the entity operating a primary use and business visitors to such use.

(m) Credit Union to be used solely by persons employed by the entity operating a primary use.

(n) Antennae (not to exceed 200 feet in height, to be measured in accordance with Section 17.56.12) and Satellite Dishes (not to exceed 30 feet in diameter), including radio, cellular, microwave and television.

(o) Printing, Publishing facilities to be used solely be persons employed by the entity operating a primary use and business visitors to such use.

(p) Radio, Television, Photograph Studio to be used solely by persons employed by the entity operating a primary use and business visitors to such use.

(q) Energy Generating Station; Gas Storage Tanks (not to exceed an aggregate capacity of 150 gallons or be located below grade); Sub-Station all owned and operated by the entity operating a primary use, provided that such uses are not made available to the general public.

(r) Museum, to be used solely by persons employed by the entity operating a primary use, the families of such employees and business visitors to such use.

(s) Helipad, to be used solely by persons employed by the entity operating the primary use and business visitors to such use, except in the event of an emergency, provided that such helipad is designed and constructed to accommodate not more than one (1) helicopter and further provided that such helipad may be subject to reasonable restrictions imposed by the Zoning Officer related to location, hours or operation and flight patterns.

For purposes of this Subparagraph F.2, Section 17.36 of the Zoning Ordinance shall not be applied hereto as a limitation or restriction on the secondary uses listed herein.

3. Prohibited Uses

Uses prohibited in Section 17.24.030 shall be prohibited uses in the TDC-1 District. In addition, the following specific uses shall be prohibited in the TDC-1 District: Auto Sales; Drive-in Theater; Go Cart Track; Bulk Storage/Sale; Propane Gas; Tattoo Parlor; Developmentally Disabled Group Home; Hospital, general; Treatment Center for Alcohol, Drug Addiction; Nursing Home; Professional Doctor Office or Clinic; Sheltered Care Home; Amphitheater; Sports Arena; Stadium; Zoological Park; Monastery; Apartments; Hotel; Motel; Tourist Home; Trailer Coach Park; Group Dwelling; Mining Extraction of Earth Products; and, Shopping Centers.

G. CONDITIONAL USES.

The following are conditional uses in the TDC-1 District and may be allowed in such district, but only upon issuance of, and in compliance with, a Conditional Use Permit as provided in Section 17.44 of the Zoning Ordinance.

1. Unless otherwise specifically listed herein, all uses designated as permitted or conditional uses in the M1 and M2 zoning districts, provided that such use complies with the requirements for secondary uses set forth in Paragraph F.2 herein.

2. Unless otherwise specifically listed herein, all uses designated as permitted or conditional uses in the Agriculture or Business districts, provided that such use complies with the requirements for secondary uses set forth in Paragraph F.2 herein.

H. TEMPORARY USES.

Temporary uses in the TDC-1 District shall be those uses enumerated in Section 17.40 of the Zoning Ordinance. All temporary uses shall be permitted in accordance with Section 17.40.

I. PERFORMANCE STANDARDS.

In the TDC-1 District, no primary, secondary or conditional use shall be conducted so as to cause the harmful discharge of any waste materials into or upon the ground, into or within any sanitary or storm sewer system or any water system, or into the atmosphere; and no use or activity shall be conducted or permitted which constitutes a menace to persons or property or which is dangerous, obnoxious, or offensive by the creation of a fire, explosion or other physical hazard, or by reason of air pollution, odor, smoke, noise, dust, vibration, radiation, or fumes. In addition, the industrial performance standards set forth in Section 17.24 of the Harvard Zoning Ordinance shall apply to all uses within Paragraph F, G and H of this Section.

J. BULK AND DEVELOPMENT REGULATIONS.

In the TDC-1 District, bulk and development regulations are intended to integrate new development into the existing surroundings in order to promote a cohesive area character. The regulations are minimum or maximum requirements.

1. Bulk Regulations.

Regulations respecting Site area and coverage, street frontage, setbacks, and building and structure height applicable to a Site shall be as follows:

Minimum Site Size	250 acres
Maximum Site Coverage	60 percent

Minimum Setbacks (Measured from lot line of Site and limited to new construction only)

Front	150 feet
Rear	150 feet

Total Side	125 feet
Abutting Side	40 feet
Abutting Street	40 feet
Abutting Res Zoned District	200 feet
Floor Area Ratio	1.0
Height of Primary Use	100 feet, to be measured in accordance with Section 17.56.12
Height of Secondary Use	100 feet, to be measured in accordance with Section 17.56.12
Loading	In accordance with the M1 regulations set forth in Section 17.32.040 and Table 12 applicable thereto
Parking	In accordance with M1 regulations set forth in Section 17.32.050 & Table 11 applicable thereto
Parking Spaces	8'-6" x 18"- 0" with 24' aisles for two- way traffic
Signs	In accordance with Section 17.32.070 and Section 14.07, provided such signs are limited to identification, directional and information signs regarding primary & secondary uses only

2. Development Regulations

(a) Enclosed Buildings
Any primary use conducted pursuant to Paragraph F shall be conducted within completely enclosed buildings or structures. This Paragraph shall not be interpreted or applied so as to prohibit the parking of semi- trailers or trucks in unenclosed parking, loading or distribution facilities. Any secondary use enumerated in Paragraph F.2(n) or (g) shall include a landscaping plan, subject to the review and approval of the Zoning Officer.

(b) Design and Maintenance -- Parking Spaces

(1) Parking Space -- Description. A required off-street parking space shall be an area of not less than one hundred fifty-three square feet nor less than eight and one-half feet wide by eighteen feet long, exclusive of access drives or aisles, ramps, columns, or other obstruction, accessible from streets or alleys or from private driveways or aisles leading to streets or alleys. Aisles between vehicular parking spaces

shall be not less than twelve feet in width when serving automobiles parked at a forty-five degree angle in one direction nor less than twenty-four feet in width when serving automobiles parked perpendicular to the aisles and accommodating two-way traffic. Where appropriate, to facilitate parking of compact automobiles, these standards may be reduced. Up to 20% of required parking spaces may be for compact cars. All parking lot designs shall comply with the Americans with Disabilities Act and shall be approved by the Zoning Officer.

Where the provision of off-street parking for fifty (50) or more vehicles is required, there shall be an open landscaped area, including a berm area, between segregated surface parking lots and a fifteen (15) foot landscaped perimeter around each such lot.

(2) Open and Enclosed Spaces. Parking areas may be open or enclosed.

(3) Access. Parking facilities shall be designed with appropriate means of vehicular access to a street or alley in such manner as will least interfere with the movement of traffic. No driveway or curb cut in the TDC-1 District shall exceed thirty-five feet in width, except the turning radii and divided entrances/exits with island dividers may be permitted to exceed this distance.

(4) Surfacing. All open off-street parking areas shall be improved with a compacted gravel base and a surface which meets applicable City Ordinances.

(5) Screening. Landscape screening of diverse types and arrangements shall be provided to screen open off-street parking areas.

(6) Lighting. All required open off-street parking areas for primary uses shall be lighted as follows:

(i) An average of one foot candle with a minimum at any one point of one-half foot candle shall be required.

(ii) All lighting cable shall be placed underground and shall be installed in steel conduit (when under pavement) and buried at a depth of two feet.

(iii) Lighting fixtures shall be so arranged as to reflect the light downward and away from residential properties with the source not visible. Lighting fixtures shall have shields to eliminate spills so that a one-tenth (1/10) foot candle would be the maximum contributory level on adjacent properties.

(iv) All lighting system designs shall be reviewed for approval by the Zoning Officer.

(7) Drainage. All off-street parking facilities shall meet all applicable City Ordinances. (Ord. 87-134, 1987)

(c) Miscellaneous
Section 17.20.130 of the Zoning Ordinance shall not apply in the TDC-1 District (Ord. 94-114, 1994)

17.20.070 Zoning Maps

The locations and boundaries of the districts established herein are shown upon the Zoning Map which is hereby incorporated into this Ordinance. The Zoning Map, together with all notations, reference and other information shown thereon, and all amendments thereto, shall be a part of this Ordinance and shall have the same force and effect as if the Zoning Map, together with all notations, references and other information shown thereon, were fully set forth and described herein.

A. BOUNDARY LINES

Wherever any uncertainty exists as to the boundary of any district as shown on the zoning maps incorporated herein, the following rules shall apply:

1. Where district boundary lines are indicated as following streets, alleys, or similar rights of-way, they shall be construed as following the center line thereof.

2. Where district boundary lines are indicated as approximately following lot lines, such lot lines shall be construed to be such boundaries.

3. Where a lot (as distinguished from acreage) held in one ownership and of record at the effective date of this Ordinance is divided by a district boundary line, the entire lot shall be constructed to be within the less restricted district; provided that this construction shall not apply if it increases the area of the less restricted portion of the lot by more than twenty percent.

4. In subdivided property, unless otherwise indicated, the district boundary line on the map accompanying and made a part of these regulations shall be determined by the use of the scale contained on such maps.

B. ZONING OF STREETS, ALLEYS, PUBLIC WAYS AND RAILROAD RIGHT-OF-WAY

All streets, alleys, public ways and railroad rights-of-way, if not otherwise specifically designated, shall be deemed to be in the same zone as the property immediately abutting upon such alleys, streets, public ways and railroad rights-of-way. Where the center line of a street, alley, public way or railroad right-of-way serves as a district boundary, the zoning of such areas, unless otherwise specifically designated, shall be deemed to be the same as that of the abutting property up to such center line.

C. ANNEXED TERRITORY

1. On land hereafter annexed to the city, no structures shall be erected, enlarged, or

moved and change in use of land, or existing structures shall be made until an amendment to this title designating the zoning district classification of such annexed land is duly adopted by the City Council; provided that if no such ordinance has been so adopted within one hundred twenty days after such land is annexed, the annexed land shall be automatically classified as R-1 single-family residence district. The Plan Commission shall, either before or not later than sixty days after any land is annexed, file in the office of the City Clerk an application for an amendment to this title establishing zoning district classifications for such land.

If the land annexed is proposed to be a different zoning classification than that of the City's Comprehensive Plan for future land use, or the land is not part of the City's Comprehensive Plan for future land use, then the Zoning Board of Appeals must hold a hearing and make a written recommendation to the Council on the proposed classification.

2. The procedure to be followed for any person, firm or corporation desiring to annex land to the City shall be to file with the City Clerk a verified petition containing the following information:

   a. The name of the recorded owner of the real estate, and if the real estate is subject to a contract of sale, the names of all contract purchasers;

   b. A legal description of the real estate desired be annexed;

   c. The names of all electors residing on the real estate and a written consent signed by all such electors; if there are no electors resident on the property a statement showing that fact;

   d. A statement that the property is contiguous to the existing corporate limits of the City.

3. Notice of the hearing date before the Plan Commission shall be published at petitioner's expense in a newspaper of general circulation in the City not less than fifteen days nor more than thirty days prior to the day of hearing.

4. The Plan Commission after holding its hearing required by this section shall file its written recommendations with the City Clerk and request the appropriate Council action. These recommendations along with the petition to annex shall be presented to the City Council at its next regular meeting following the hearing date. (Ord. 87-134)

17.20.080 Lot Area, Yard and Bulk Regulations (See Table 1)

A. LOT AREA

Any principal use together with all accessory uses shall be located on a lot having an area as shown in Table 1, Column 3.

The minimum lot area for two family, multiple family, and townhouse and any other attached dwellings shall be the sum of the lot area required for the first dwelling unit, plus the lot area required for the second dwelling unit, plus the lot area required for each additional dwelling unit as shown in Table 1, Column 3.

B. LOT WIDTH

Any principal use, together with all accessory uses, shall be located on a lot having a minimum width as shown in Table 1, Column 4.

The minimum lot width for two family, multiple family, townhouse, and any other attached dwellings shall be the sum of the width required for the first dwelling unit plus the width required for the second dwelling unit plus the width required for each additional dwelling unit.

C. FRONT YARD

Each lot shall have a front yard as shown in Table 1, Column 5 except as provided in Section 17.20.140.

D. REAR YARD

Each lot shall have a rear yard as shown in Table 1, Column 6 except as provided in Section 17.20.140.

E. SIDE YARD

Each lot shall have a side yard extending along each side lot line, the total width of which is not less than shown in Table 1, Column 7 and no side yard shall be less than as shown in Table 1, Column 8 and Column 10 except as provided in Section 17.20.140.

F. YARD ABUTTING A STREET

Any side or rear yard which abuts a street shall have a width of not less than as shown in Table 1, Column 9 except as provided in Section 17.20.140.

G. YARD ABUTTING A RESIDENTIAL ZONE

Any side or rear yard which abuts a street shall have a width of not less than as shown in Table 1, Column 9 except as shown in Table 1, Column 10.

H. LOT COVERAGE

The total ground area occupied by any principal building, together with all accessory buildings shall not exceed the percent of the total area of the lot as shown in Table 1, Column 11.

I. FLOOR AREA RATIO

The combined floor area ratio for any principal building together with all accessory buildings shall not exceed the ratio shown in Table 1, Column 12. (See Plate 2)

PLATE 2
LOT COVERAGE & FLOOR AREA RATIO (FAR)

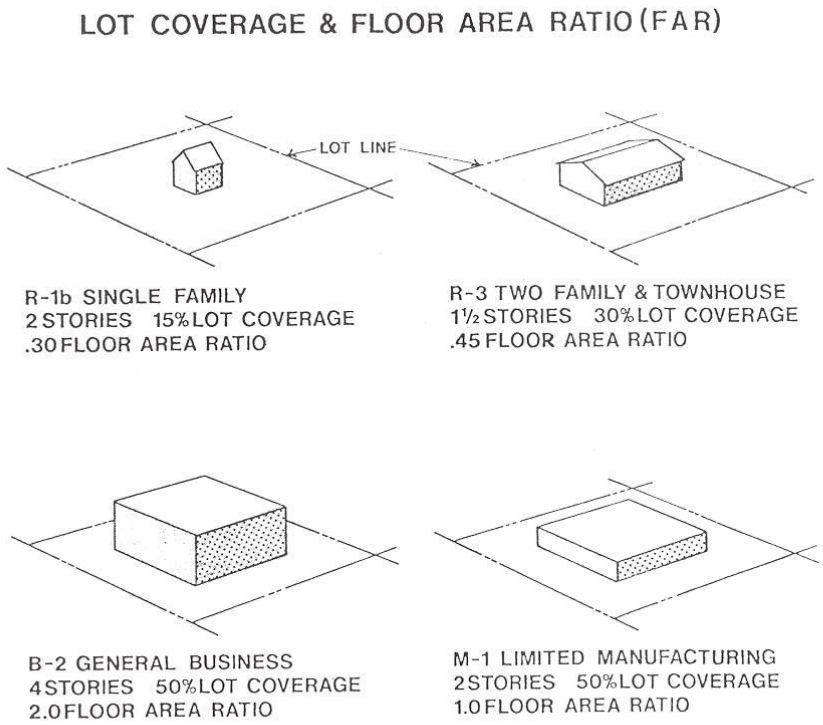

FOR ILLUSTRATIVE PURPOSES ONLY. THIS IS NOT A PART OF THE ZONING ORDINANCE. THE REGULATIONS OF THE ZONING ORDINANCE GOVERN IN ALL CASES.

PLATE 2 (CONTINUED)

LOT COVERAGE & FLOOR AREA RATIO

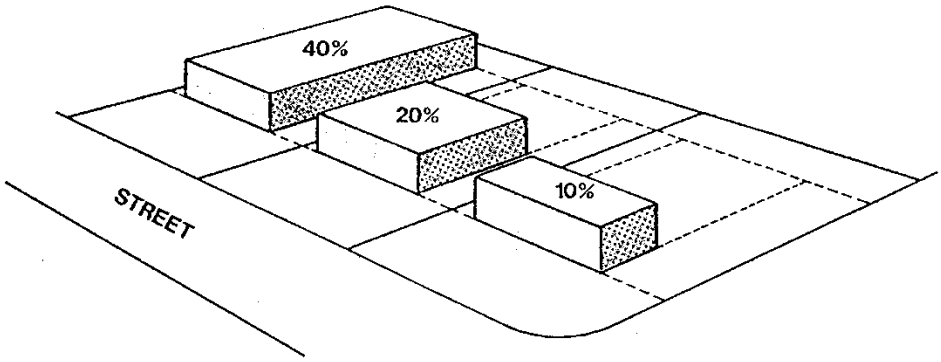

FLOOR AREA RATIO (FAR)

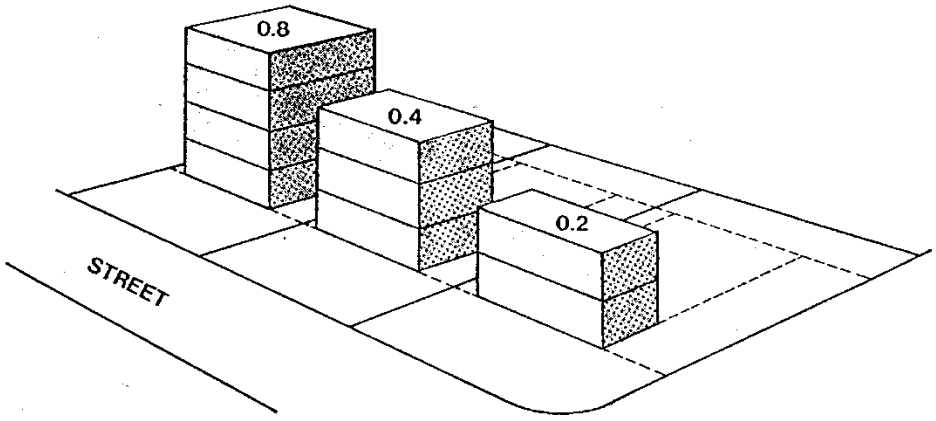

To determine maximum allowable total floor area on a lot:
MULTIPLY FAR x LOT AREA = MAXIMUM TOTAL FLOOR AREA*
(Example) 2.0 x 25,000 sq. ft. = 50,000 sq. ft. of floor area

* MAINTAINING YARD SETBACKS AND HEIGHT LIMITATIONS

FOR ILLUSTRATIVE PURPOSES ONLY. THIS IS NOT A PART OF THE ZONING ORDINANCE. THE REGULATIONS OF THE ZONING ORDINANCE GOVERN IN ALL CASES.

PLATE 3

BUILDING HEIGHTS

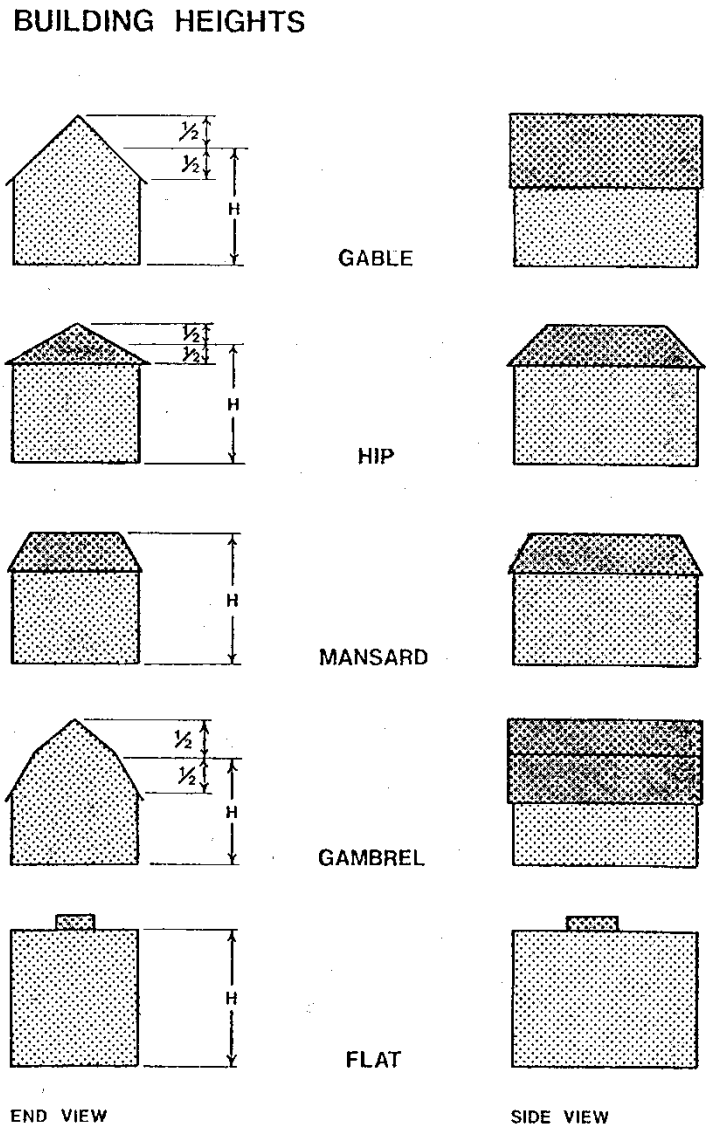

FOR ILLUSTRATIVE PURPOSES ONLY. THIS IS NOT A PART OF THE ZONING ORDINANCE. **THE REGULATIONS** OF THE ZONING ORDINANCE GOVERN IN ALL CASES.

TABLE 1
LOT AREA, YARD AND BULK REGULATIONS

ZONE	USE	LOT SIZE		YARDS						BULK					
		AREA	WIDTH	FRONT	REAR	TOTAL SIDE	MINIMUM SIDE	ABUTTING STREET	ABUTTING A RES ZONE	LOT COVERAGE	FAR	HEIGHT OF PRINCIPAL USE		HEIGHT OF ACCESSORY USE	
		SQ FT.	FT.	FT.	FT.	FT.	FT.	FT.	FT.	%	--	FT	STORY	FT	STORY
1	2	3	4	5	6	7	8	9	10	11	12	13	14	15	16
A	Agriculture	40,000	150	50	100	50	25	40	50	NA	NA	35	2.5	25	2
R-1	Single Family	13,000	90	25	30	20	9	25	NA	NA	NA	35	2.5	15	1
	Non-Residential	19,000	120	25	30	24	12	25	NA	NA	NA	35	2.5	15	1
R-1A	Single Family Residence	9,500	75	25	30	15	6	25	NA	NA	NA	35	2.5	15	1
R-1B	Single Family Residence	8,712	66	25	30	15	6	25	NA	NA	NA	35	2.5	15	1
R-2	Single Family	8,712	66	25	30	15	6	25	NA	NA	NA	35	2.5	15	1
	Two Family	12,300	88	25	30	15	6	25	NA	NA	NA	35	2.5	15	1
	Non-Residential	12,000	99	25	30	25	10	25	NA	40	0.4	35	2.5	15	1
	(1) Detached Garages and Storage Buildings are permitted in residential districts rear yards to within four (4) feet of the rear or side lot lines. (17.20.080 amended 89-140, 1989) (2) Modified yard requirements are applicable when sixty (60) percent or more of the lots or parcels of the same zoning district classification in a block contain existing structures and establish a building line other than required by this Harvard Zoning Ordinance, that line shall establish the required yard. If the building lines of such structures vary, other than required by this Harvard Zoning Ordinance, the average of all structures shall establish the minimum yard requirement. (17.20.080 amended 2005-104)														
R-T	Single Family	8,712	66	25	30	15	6	25	NA	NA	NA	35	2.5	15	1
	Two Family	12,300	88	25	30	15	6	25	NA	NA	NA	35	2.5	15	1
	Multi-Family:														
	1st D.U.	8,712	66+	25	30	15	6	25	NA	NA	NA	35	2.5	15	1
	2nd D.U.	5,000	10+	25	30	15	6	25	NA	NA	NA	35	2.5	15	1
R-3	Single Family	8,712	66	25	30	15	6	25	NA	NA	NA	35	2.5	15	1
	Two Family	12,300	88	25	30	15	6	25	NA	NA	NA	35	2.5	15	1
	Multi-Family:														
	1st D.U.	8,712	66+	25	30	15	6	25	NA	NA	NA	35	2.5	15	1
	2nd D.U.	5,000	10+	25	30	15	6	25	NA	NA	NA	35	2.5	15	1
	Non-Residential	15,000	100	25	30	25	10	25	NA	NA	0.4	35	2.5	15	1
R-55	Single Family	8,712	66	25	30	15	6	25	NA	NA	NA	35	2.5	15	1
	Two Family	12,300	88	25	30	15	6	25	NA	NA	NA	35	2.5	15	1
	Multi Family:														
	1st D.U.	8,712	66+	25	30	15	6	25	NA	NA	NA	35	2.5	15	1
	2nd D.U.	5,000	10+	25	30	15	6	25	NA	NA	NA	35	2.5	15	1
	Non-Residential	15,000	100	25	30	25	10	25	NA	NA	0.4	35	2.5	15	1
0	Office	15,000	100	40	20	20	10	25	40	40	1.0	25	2	15	1
B-1	All Uses	20,000	100	80	20	20	10	25	25	40	0.4	20	1	15	1
B-2	All Uses	--	--	--	--	--	--	--	25	--	2.5	55	5	20	1
B-3	All Uses	15,000	100	40	20	20	10	25	40	40	1.0	25	2	15	1
B-4	All Uses	5 Acre	200	40	40	30	15	25	40	0.05	0.1	35	2.5	15	1
B-P	All Uses	20,000	100	40	20		10	40		60		70			
M-1	All Uses	20,000	100	40	20	20	10	40	40	50	1.0	35	2	35	1
M-2	All Uses	40,000	200	40	20	20	10	40	40	50	1.0	35	2	35	1

J. HEIGHT OF PRINCIPAL USE

No principal building or other structure shall exceed the height in feet shown in Table 1, Column 13, nor the height in stories as shown in Table 1, Column 14. (See Plate 3)

K. HEIGHT OF ACCESSORY USE

1. All accessory buildings or other structures on any lot, other than a lot in a manufacturing district, shall be pursuant to columns 15 and 16 in Table 1, Lot Area, Yard and Bulk Regulations. (Ord 2009-102, §1; Ord. 2005-104,§4; Ord. 87-134, 1987)

2. No accessory building or other structure in any manufacturing district lot shall exceed the lesser of the height shown in feet in Table 1, column 15, herein, or the height in feet of the principal building or the height shown in stories in Table 1, column 16, herein. (Ord. 2005-104, §4)

17.20.090 Minimal Standards -- Residential Dwellings -- Size -- Appearance

A. For the purpose of this Section, floor area shall be defined in the same manner as the definition of floor area of a residence, in Section 17.56, Paragraph 37 of this Ordinance, except that, for the minimum square footage standards set forth in this Section 17.20.091, the floor area used for attached garages shall be excluded.

B. With reference to the minimum standards for residential floor area as defined in Paragraphs A and B of this Section, the minimum square footage requirements that must be met before a building permit will be issued for construction of any residential dwelling shall be as follows:

1. In the R-1 District, the minimum total floor area of the building must be no less than 1600 square feet.

2. In the R-2 District, the minimum total floor area of the building must be 1200 square feet for a single family unit, and 1700 square feet for a duplex unit, consisting of 850 square feet per unit.

3. For a single family unit in the R-3 District, the minimum floor area must be 1000 square feet.

4. For a duplex unit in the R-3 District, the minimum floor area shall be 1700 square feet, consisting of 850 square feet per unit.

5. In all multiple family dwellings (R-3 District), as defined in Section 17.56., Paragraph 24, of this Ordinance, (Units created for occupancy by three or more families), the minimum floor area shall be 500 square feet per unit.

6. In the R-T Townhouse Residence District, the minimum floor area for a single unit shall be 850 square feet. (Ord. 2004-108,§4, 2004)

C. With reference to one family and two family dwelling units, in all subdivisions or planned unit developments containing same, there shall be constructed no more than one of said dwellings (without regard to whether it is a one or two family dwelling), of the like exterior design on either side of the street within 330 feet. A change in exterior design, shall require more than the mere change of details in the front elevation of a building, or window relocation, without substantially changing the size of such windows or changing the location of doors or entrances or roof lines. (Ord. 89-104, §1)

17.20.100 Uses Permitted in Zoning Districts

The uses permitted in the zoning districts established by this ordinance are shown in Table 3.

A. Uses Permitted in Zoning Districts. Uses permitted by right are indicated by an "X" placed in the Zoning District column opposite the use.

B. Uses permitted as conditional uses in a zoning district are indicated by a "C" placed in the Zoning District column opposite the use. Conditional uses are only permitted subsequent to the issuance of a Conditional Use Permit as provided in Section 17.44. A particular use may be a permitted use in one zoning district and a conditional use in another zoning district.

C. Temporary uses are indicated by a "T" placed in the Zoning District column opposite the use. Temporary uses are only permitted subsequent to the issuance of a Temporary Use Permit as provided in Section 17.40. (Ord. 87-134, 1987)

D. Farming Agricultural uses are not allowed in fully developed lots or parcels in the R1, R1A, R1B, R2, R3, R55, and the R-T Zoning Districts. (Ord. 2013-127,§1)

USES PERMITTED IN ZONING DISTRICTS

Note: Permitted uses are listed below under various headings. When a use does not appear under a specific heading, refer to another heading, an example: Doctor's office is not found under Office but under Health Care. A stockbroker is listed under Office instead of Financial and office equipment & supplier sales will be listed under Commercial Service instead of Retail Sales. If a certain use does not appear then it is not permitted.

The following headings are found in Table 3.

Heading	**Page**
AGRICULTURAL USES	
Agriculture	38
Agricultural Business	38
BUSINESS USES	
Automotive	39
Commercial Recreation	40
Commercial Service	41
Financial	42
Food Service	42
Office	43
Personal Services	44
Retail Sales	45
INDUSTRIAL USES	
Construction	46
Industrial Service	46
Manufacturing	46
PUBLIC USES	
Education	47
Health Care	47
Public Facilities	48
Public Recreation	48
Public Utility	49
Religious	49
RESIDENTIAL USES	50
SPECIAL USES	51
TRANSPORTATION USES	52
TEMPORARY USES	53

SECTION 17.20.100

TABLE 3

USES PERMITTED

IN ZONING DISTRICTS

TABLE 3

USES PERMITTED IN ZONING DISTRICTS

Permitted Uses for TDC-1 District are located in Section 17.20.065 of this Ordinance.

ZONING DISTRICTS															AGRICULTURE
A	**R1**	**R1A R1B**	**R2**	**R3**	**R55**	**R-T**	**O**	**B1**	**B2**	**B3**	**B4**	**BP**	**M1**	**M2**	X - Permitted Use C - Conditional Use T - Temporary Use
															AGRICULTURE
X															**Apiary (two or more hives)**
X															**Dairy Farm**
X	**X**	**X**	**X**	**X**		**X**				**X**	**X**	**X**	**X**	**X**	**Farming (cultivation of field, garden crops) including farm residence**
X													**X**	**X**	**Fish Hatchery**
X															**Flower Farm**
X															**Game Animal Farm**
X															**Grass or Sod Farm**
X											**X**		**X**	**X**	**Orchard**
X											**X**		**X**	**X**	**Truck Farm**
X	**C**														**Farm Pets**
X															**Wildlife Preserve**
															AGRICULTURE BUSINESS
X															**Breeding Station**
X										**X**	**X**		**X**	**X**	**Feed and Grain Sales**
X										**X**	**X**		**X**	**X**	**Greenhouse**
X										**X**					**Kennel**
X													**X**	**X**	**Mushroom Production Barn**
X										**X**	**X**		**X**	**X**	**Nursery, Including Retail Sales & Wholesale**
X															**Poultry Hatchery**
X											**X**				**Stable**
X										**X**					**Veterinary Clinic**

TABLE 3
USES PERMITTED IN ZONING DISTRICTS

ZONING DISTRICTS															BUSINESS USES
A	**R1**	**R1A R1B**	**R2**	**R3**	**R55**	**R-T**	**O**	**B1**	**B2**	**B3**	**B4**	**BP**	**M1**	**M2**	X - Permitted Use C - Conditional Use T - Temporary Use
															AUTOMOTIVE
										C					**Agricultural Implement Sales & Service**
										C		**C**	**C**	**C**	**Automobile Car Wash & Detailing**
										C		**C**			**Automobile Rental**
										C			**C**	**C**	**Auto Repair**
										C		**C**			**Auto Sales (showroom)**
										C					**Boat Sales**
										C			**C**	**C**	**Garage, Bus or Truck**
										C		**C**			**Gasoline Service Station**
										C					**Motorcycle Sales (showroom & service)**
													C	**C**	**Outside Storage of Vehicles (titled & registered)**
													C	**C**	**Outside Storage of Vehicles (titled & unregistered)**
										C					**Recreational Vehicle Sales (showroom and service)**
										C			**C**	**C**	**Taxicab Garage**
										C			**C**	**C**	**Trailer Rental**
										C			**C**	**C**	**Truck Rental**
										C			**C**	**C**	**Truck Repair**
										C			**C**	**C**	**Truck Sales (showroom)**

TABLE 3
USES PERMITTED IN ZONING DISTRICTS

ZONING DISTRICTS															BUSINESS USES
A	**R1**	**R1A R1B**	**R2**	**R3**	**R55**	**R-T**	**O**	**B1**	**B2**	**B3**	**B4**	**BP**	**M 1**	**M2**	X - Permitted Use C - Conditional Use T - Temporary Use
															COMMERCIAL RECREATION
										X	**X**				**Billiard Parlor**
										X	**X**				**Bowling Alley**
									X	**X**	**X**				**Club, Private Indoor**
										X	**X**				**Club, Private Outdoor**
											X				**Conservation Club**
	C		**C**	**C**		**C**					**X**				**Country Club**
										C	**C**				**Dance Hall**
									X	**X**	**X**				**Dance Studio**
										X	**X**				**Game Room**
										C	**C**				**Go-Cart Track**
C	**C**	**C**	**C**	**C**	**C**	**C**	**C**	**C**	**C**	**C**	**C**	**C**	**C**	**C**	**Golf Course**
											C		**C**	**C**	**Golf Driving Range**
									X	**X**	**X**	**X**	**X**	**X**	**Health Club or Gymnasium**
										X	**X**				**Miniature Golf**
									X	**X**	**X**		**X**	**X**	**Motion Picture Theater, Indoor**
											X				**Park, Commercial Recreation**
X											**X**				**Riding Stable**
											C		**C**	**C**	**Rod and Gun Club**
										X	**X**				**Skating Rink**
	C	**C**	**C**	**C**	**C**	**C**			**X**	**X**	**X**	**X**			**Swimming Pool, Indoor Private Club**
										X	**X**				**Sports Arena**
	C	**C**	**C**	**C**	**C**	**C**				**X**	**X**	**X**	**X**	**X**	**Tennis Club (private or daily fee)**
										C	**C**		**C**	**C**	**Theater, Drive-in**
									X	**X**	**X**				**Theater, Performing Arts**
X											**X**				**Zoological Park**

TABLE 3
USES PERMITTED IN ZONING DISTRICTS

ZONING DISTRICTS															BUSINESS USES
A	**R1**	**R1A R1B**	**R2**	**R3**	**R55**	**R-T**	**O**	**B1**	**B2**	**B3**	**B4**	**BP**	**M1**	**M2**	X - Permitted Use C - Conditional Use T - Temporary Use
															COMMERCIAL SERVICE
							X		**X**	**X**		**X**			**Advertising Agency**
										X			**X**		**Advertising Display Construction**
									X	**X**					**Appliance Service Only**
									X	**X**					**Auction House**
									X	**X**		**X**			**Blueprint, Photostat Shop**
										C	**C**		**C**	**C**	**Bulk Storage & Wholesale/Retail Sale of Fuel**
									X	**X**					**Business Machine Repair**
							X					**X**	**X**	**X**	**Commercial Cleaning: Office**
										X			**X**	**X**	**Dry Cleaning/Laundry (non-retail)**
													X	**X**	**Exterminating & Fumigating**
									X	**X**			**X**	**X**	**Furniture Repair and Refinishing**
										X			**X**	**X**	**Mail Order House**
									X	**X**			**X**	**X**	**Newspaper, Publisher**
									X	**X**		**X**			**Office Equipment & Supplier Sales**
									C	**C**					**Outdoor Sales, Service**
									X	**X**		**X**	**X**	**X**	**Printing, Publishing**
							X		**X**	**X**		**X**	**X**	**X**	**Radio, Television Studio**
							X	**X**	**X**	**X**		**X**			**Real Estate Office**
															SIGNS – SEE CHAPTER 14
							X	**X**	**X**						**Stenographic Service**
									C	**C**					**Tattoo Parlor**
										X		**X**	**X**	**X**	**Wholesaling Commercial, Retail Products**
							X						**X**	**X**	**Window Cleaning Service**

TABLE 3
USES PERMITTED IN ZONING DISTRICTS

ZONING DISTRICTS															BUSINESS USES
A	**R1**	**R1A R1B**	**R2**	**R3**	**R55**	**R-T**	**O**	**B1**	**B2**	**B3**	**B4**	**BP**	**M1**	**M2**	X - Permitted Use C - Conditional Use T - Temporary Use
															FINANCIAL
									X	**X**		**X**			**Bank**
									X	**X**		**X**			**Credit Union**
									X	**X**		**X**			**Currency Exchange**
									X	**X**					**Personal Loan Agency**
									X	**X**		**X**			**Saving & Loan Association**
															FOOD SERVICE
								X	**X**	**X**	**X**	**X**			**Cafeteria**
								X	**X**	**X**	**X**	**X**			**Carry Out Food Service/Catering**
										X					**Drive-in Restaurant (may include sit-down dining)**
										X		**X**	**X**	**X**	**Frozen Food Locker**
								X	**X**	**X**		**X**			**Ice Cream Shop**
								X	**X**	**X**	**X**	**X**			**Restaurant**
								X	**X**	**X**					**Soft Drink Stand**
									X	**X**	**X**				**Restaurant, Tavern**
									C	**C**	**C**				**Night Club with Dancing or Live Entertainment**

TABLE 3
USES PERMITTED IN ZONING DISTRICTS

ZONING DISTRICTS															BUSINESS USES
A	**R1**	**R1A R1B**	**R2**	**R3**	**R55**	**R-T**	**O**	**B1**	**B2**	**B3**	**B4**	**BP**	**M1**	**M2**	X - Permitted Use C - Conditional Use T - Temporary Use
															OFFICE
							X	**X**	**X**	**X**		**X**			**Bookkeeping Service**
							X	**X**	**X**	**X**		**X**			**Commodities Broker**
							X	**X**	**X**	**X**		**X**			**Detective Agency**
							X	**X**	**X**	**X**					**Employment Office**
							X	**X**	**X**	**X**		**X**			**Engineering Office**
							X	**X**	**X**	**X**		**X**			**Income Tax Service**
							X	**X**	**X**	**X**		**X**			**Insurance Office**
							X		**X**	**X**		**X**	**X**	**X**	**Mfg. Agent Office**
							X	**X**	**X**	**X**	**X**	**X**	**X**	**X**	**Offices for Executive or Administrative Purposes**
										C	**C**	**C**	**C**	**C**	**Parking Garage**
							X	**X**	**X**	**X**		**X**			**Professional Offices (also see Public Health Care Uses)**
							X	**X**	**X**	**X**		**X**			**Public Accountant**
							X	**X**	**X**	**X**		**X**			**Stockbroker**
								X	**X**	**X**		**X**			**Ticket Office**
								X	**X**	**X**		**X**			**Title Company**
								X	**X**	**X**		**X**			**Travel Agency**
								X	**X**	**X**		**X**	**X**	**X**	**Utility Office**

TABLE 3
USES PERMITTED IN ZONING DISTRICTS

ZONING DISTRICTS															BUSINESS USES
A	**R1**	**R1A R1B**	**R2**	**R3**	**R55**	**R-T**	**O**	**B1**	**B2**	**B3**	**B4**	**BP**	**M1**	**M2**	X - Permitted Use C - Conditional Use T - Temporary Use
															PERSONAL SERVICES
								X	**X**	**X**					**Barber Shop**
								X	**X**	**X**					**Catalog Sales Office**
									X	**X**					**Clothes, Pressing and Repair Dressmaker/Seamstress/Tailor**
	C		**C**	**C**	**C**	**C**		**X**	**X**	**X**	**X**	**X**			**Day Care**
								C	**X**	**X**					**Funeral Home, Mortuary**
							X		**X**	**X**					**Interior Decorating Studio**
									C						**Laundry Service, Non-Retail**
								X	**X**	**X**					**Laundry, Cleaning and Dyeing, Retail**
								X	**X**	**X**					**Locksmith**
									X	**X**	**X**	**X**			**Motel/Hotel**
								X	**X**	**X**					**Photography Studio**
									X	**X**	**X**				**Reducing Salon, Masseur, Steambath**
								X	**X**	**X**					**Shoe, Hat Repair**
										X			**X**		**Taxidermist**
											X				**Resort**

TABLE 3
USES PERMITTED IN ZONING DISTRICTS

	ZONING DISTRICTS														BUSINESS USES
A	**R1**	**R1A R1B**	**R2**	**R3**	**R55**	**R-T**	**O**	**B1**	**B2**	**B3**	**B4**	**BP**	**M1**	**M2**	X - Permitted Use C - Conditional Use T - Temporary Use
															RETAIL SALES
								X	**X**	**X**					**Retail Sales as defined in Section 17.56 herein**
													C	**C**	**Adult Business**
										C	**C**				**Swimming Pool Sales, Associated Services**

TABLE 3
USES PERMITTED IN ZONING DISTRICTS

ZONING DISTRICT															INDUSTRIAL USES
A	**R1**	**R1A R1B**	**R2**	**R3**	**R55**	**R-T**	**O**	**B1**	**B2**	**B3**	**B4**	**BP**	**M1**	**M2**	X - Permitted Use C - Conditional Use T - Temporary Use
															CONSTRUCTION
										X			**X**	**X**	**Building Material Sales**
										X			**X**	**X**	**Bulk Material Storage Yard**
										X			**X**	**X**	**Contractor Equipment Storage Yard or Plant**
										X			**X**	**X**	**Electrical Equipment Sales & Fixtures**
										X			**X**	**X**	**Machinery Storage Yard**
										X			**X**	**X**	**Monument Works**
										X			**X**	**X**	**Plumbing Supplies & Fixture Sales**
										X			**X**	**X**	**Pump Sales**
										C			**X**	**X**	**Septic Tank Sales & Service**
															INDUSTRIAL SERVICE
												X	**X**	**X**	**Carpet & Rug Cleaning Plant***
												X	**X**	**X**	**Dry Cleaning, Dyeing Plant***
													X	**X**	**Furniture Cleaning Plant**
													X	**X**	**Laboratory – For Experimentation & Scientific Research**
													X	**X**	**Laboratory - For Testing Materials, Products**
										X			**X**	**X**	**Laundry Plant, Non-Retail**
										X		**X**	**X**	**X**	**Mirror/Glass Supply, Refinishing***
									X	**X**		**X**			**Upholstery Shop***
															MANUFACTURING*
												X	**X**	**X**	**Manufacturing uses, including but not limited to assembly, cleaning, compounding, fabrication, manufacturing, custom building, mixing, packaging, processing and production which can meet the highest industrial performance standards.** *** - in BP District, outside storage is limited to rear yard and not visible from the street; loading docks inside in rear yards; screening may be required.**
												X	**X**	**X**	**Warehouse**

TABLE 3
USES PERMITTED IN ZONING DISTRICTS

ZONING DISTRICTS															PUBLIC USES
A	**R1**	**R1A R1B**	**R2**	**R3**	**R55**	**R-T**	**O**	**B1**	**B2**	**B3**	**B4**	**BP**	**M1**	**M2**	X - Permitted Use C - Conditional Use T - Temporary Use
															EDUCATION (PUBLIC & PRIVATE)
	C		**C**	**C**		**C**						**C**			**College, Junior**
	C		**C**	**C**		**C**						**C**			**College, University**
								C	**C**	**C**		**C**			**Commercial School, Trade School or Specialized Course of Study**
C	**C**	**C**	**C**	**C**		**C**		**C**	**C**	**C**	**C**		**C**	**C**	**Elementary/Jr. High**
C	**C**	**C**	**C**	**C**		**C**		**C**	**C**	**C**	**C**		**C**	**C**	**Kindergarten**
	C		**C**	**C**	**C**	**C**		**C**	**C**	**C**	**C**	**C**			**Day Care**
	C		**C**	**C**		**C**									**School for Mentally, Physically Handicapped**
C	**C**	**C**	**C**	**C**		**C**		**C**	**C**	**C**	**C**		**C**	**C**	**High School**
															HEALTH CARE
								C	**C**	**X**	**X**	**X**			**Ambulatory Care Facility**
X	**X**	**X**	**X**	**X**	**X**	**X**	**X**	**X**	**X**	**X**	**X**				**Group Home Type 1** **Group Home Type 2**
	C	**C**	**C**	**C**	**C**	**C**		**C**	**C**	**C**	**C**	**X**			**Hospital, General**
	C	**C**	**C**	**C**	**C**	**C**		**C**	**C**	**C**					**Hospital or Treatment Center for Alcohol, Drug Addiction or Similar Affliction**
							C			**X**		**X**	**X**	**X**	**Medical Laboratory**
			C	**C**	**C**	**C**	**C**	**C**	**C**	**C**	**C**				**Mental Health Services**
	C	**C**	**C**					**C**	**C**	**C**					**Nursing Home**
							X		**X**	**X**	**C**	**X**			**Optometry Office**
C	**C**	**C**	**C**	**C**		**C**	**C**	**X**	**X**	**X**	**C**	**X**	**X**	**X**	**Professional Doctor Office or Clinic**
	C	**C**	**C**	**C**		**C**									**Sheltered Care Home**

TABLE 3
USES PERMITTED IN ZONING DISTRICTS

ZONING DISTRICTS															PUBLIC USES
A	**R1**	**R1A R1B**	**R2**	**R3**	**R55**	**R-T**	**O**	**B1**	**B2**	**B3**	**B4**	**BP**	**M1**	**M2**	X - Permitted Use C - Conditional Use T - Temporary Use
															PUBLIC FACILITIES
	C		**C**	**C**		**C**									**Cemetery, Mausoleum**
	C		**C**	**X**		**X**	**C**	**X**	**X**	**X**	**X**	**X**	**X**	**X**	**Government Office & Services**
C	**C**	**C**	**C**	**C**		**C**		**C**	**C**	**C**	**C**		**C**	**C**	**Library**
				X		**X**			**X**		**X**				**Museum**
X	**X**	**X**	**X**	**X**	**X**	**X**	**X**	**X**	**X**	**X**	**X**	**X**	**X**	**X**	**Police Station, Fire Station and Rescue Squad Station**
									X	**C**	**C**	**C**			**Post Office**
															PUBLIC RECREATION (Not for Profit)
									C	**C**	**C**		**C**	**C**	**Amphitheater**
								X	**X**	**X**	**X**		**X**	**X**	**Auditorium**
	C	**C**	**C**	**C**		**C**			**C**	**C**	**C**				**Community Center**
X	**X**	**X**	**X**	**X**		**X**		**X**	**X**	**X**	**X**		**X**	**X**	**Gymnasium**
X	**X**	**X**	**X**	**X**		**X**		**X**	**X**	**X**	**X**	**X**	**X**	**X**	**Park**
X	**X**	**X**	**X**	**X**		**X**		**X**	**X**	**X**	**X**	**X**	**X**	**X**	**Playground**
C	**C**	**C**	**C**	**C**		**C**		**C**	**C**	**C**	**C**		**C**	**C**	**Sports Arena**
C	**C**	**C**	**C**	**C**		**C**		**C**	**C**	**C**	**C**		**C**	**C**	**Stadium**
	C	**C**	**C**	**C**		**C**		**X**	**X**	**X**	**X**		**X**	**X**	**Swim Pool, Indoor**
										X	**X**				**Tennis Courts, Indoor**
X											**X**				**Wildlife Preserve**
X											**X**				**Zoological Park**

TABLE 3
USES PERMITTED IN ZONING DISTRICTS

ZONING DISTRICTS															PUBLIC USES
A	**R1**	**R1A R1B**	**R2**	**R3**	**R55**	**R-T**	**O**	**B1**	**B2**	**B3**	**B4**	**BP**	**M1**	**M2**	X - Permitted Use C - Conditional Use T - Temporary Use
															PUBLIC UTILITY
										C	**C**		**C**	**C**	**Energy Generating Station**
										C			**C**	**C**	**Fuel Storage Tank**
C	**C**	**C**	**C**	**C**	**C**	**C**	**C**	**C**	**C**	**C**	**C**	**C**	**C**	**C**	**Sub-Station**
C	**C**	**C**	**C**	**C**	**C**	**C**	**C**	**C**	**C**	**C**	**C**	**C**	**C**	**C**	**Telephone Exchange/ Microwave Towers**
													X	**X**	**Utility Company Maintenance Yard or Depot**
													X	**X**	**Utility Service Yard or Garage**
	X	**X**	**X**	**X**		**X**			**X**	**X**		**X**	**X**	**X**	**Water Storage Tank**
										X		**X**	**X**	**X**	**Wastewater Treatment Facility**
															RELIGIOUS
C	**C**	**C**	**C**	**C**		**C**		**C**	**C**	**C**	**C**	**C**	**C**	**C**	**Church or Other Place of Worship**
C	**C**	**C**	**C**	**C**		**C**		**C**	**C**	**C**	**C**	**C**	**C**	**C**	**Convent/Monastery**
C	**C**	**C**	**C**	**C**		**C**		**C**	**C**	**C**	**C**	**C**	**C**	**C**	**Rectory**
C	**C**	**C**	**C**	**C**		**C**		**C**	**C**	**C**	**C**	**C**	**C**	**C**	**Sunday School**

TABLE 3
USES PERMITTED IN ZONING DISTRICTS

ZONING DISTRICT															RESIDENTIAL USES
A	**R1**	**R1A R1B**	**R2**	**R3**	**R55**	**R-T**	**O**	**B1**	**B2**	**B3**	**B4**	**BP**	**M1**	**M2**	X - Permitted Use C - Conditional Use T - Temporary Use
															RESIDENTIAL USES
				X	**X**										**Apartment Building with 4 or less dwelling units & triplex, quad dwelling structures**
				X	**X**						**C**				**Apartment Building with 24 or less dwelling units***
								C	**C**	**C**					**Apartments above first floor business uses**
				C		**C**									**Rooming House, 3 or more bedrooms**
	C	**C**	**C**	**C**		**C**									**Tourist Home (bed & breakfast)**
X	**X**	**X**	**X**	**X**	**X**	**X**									**Single Family Dwelling**
				X	**X**										**Townhouse, triplex, quad buildings, 4 or less dwelling units per structure**
				X	**X**	**X**									**Townhouse, 6 dwelling units or less per structure**
			X	**X**	**X**	**X**									**Two-family Dwelling**
			X	**X**	**X**										**Condominium**
				C											**Trailer Coach Park**
															*** In B-4, Multiple Family Dwelling Units must be a planned development following the provisions in Section 17.44.055**

TABLE 3
USES PERMITTED IN ZONING DISTRICTS

ZONING DISTRICTS															SPECIAL USES
A	**R1**	**R1A R1B**	**R2**	**R3**	**R55**	**R-T**	**O**	**B1**	**B2**	**B3**	**B4**	**BP**	**M1**	**M2**	X - Permitted Use C - Conditional Use T - Temporary Use
													C	**C**	**Mining, Extraction of Earth Products**
C	**C**	**C**	**C**	**C**	**C**	**C**	**C**	**C**	**C**	**C**	**C**	**C**	**C**	**C**	**Planned Developments**
								C	**C**	**C**		**C**			**Shopping Centers, Service Plazas**

TABLE 3
USES PERMITTED IN ZONING DISTRICTS

ZONING DISTRICTS															TRANSPORTATION USES
A	**R1**	**R1A R1B**	**R2**	**R3**	**R55**	**R-T**	**O**	**B1**	**B2**	**B3**	**B4**	**BP**	**M1**	**M2**	X - Permitted Use C - Conditional Use T - Temporary Use
												X	**C**	**C**	**Airport/Heliport**
													X	**X**	**Bus Garage, Car Barn**
													X	**X**	**Grain Elevators**
				C		**C**		**C**	**C**	**C**	**C**		**C**	**C**	**Mini-Storage Units**
													X	**X**	**Motor-rail Freight Terminal**
				C		**C**			**C**	**C**	**C**		**X**	**X**	**Parking Garage, Public**
								C	**C**	**C**	**C**		**C**	**C**	**Parking Area, Public**
													X	**X**	**Train Station**
													X	**X**	**Truck Terminal**
													X	**X**	**Warehouse, Storage**
	C	**C**	**C**	**C**	**C**	**C**									**Non-residential Parking Lot**

TABLE 3
USES PERMITTED IN ZONING DISTRICTS

ZONING DISTRICTS															TEMPORARY USES
A	**R1**	**R1A R1B**	**R2**	**R3**	**R55**	**R-T**	**O**	**B1**	**B2**	**B3**	**B4**	**BP**	**M1**	**M2**	X - Permitted Use C - Conditional Use T - Temporary Use
										T	**T**		**T**		**Amusement Park**
	T		**T**	**T**		**T**			**T**	**T**	**T**		**T**		**Carnival or Circus**
T	**T**		**T**	**T**		**T**		**T**	**T**	**T**	**T**		**T**		**Christmas Tree Sales**
	T		**T**	**T**		**T**		**T**	**T**	**T**	**T**		**T**	**T**	**Contractor's Office & Equipment Shed**
									T	**T**					**Outdoor Sales, Service**
	T		**T**	**T**		**T**									**Real Estate Model Sales Office**
	T		**T**	**T**		**T**		**T**	**T**	**T**	**T**		**T**		**Religious Tent Meeting**
T	**T**		**T**	**T**		**T**		**T**	**T**	**T**	**T**		**T**		**Seasonal Sale of Garden Products**
									T	**T**	**T**				**Special Promotions**
	T		**T**	**T**		**T**			**T**	**T**	**T**		**T**		**Tent Theater**

17.20.110 Location of Buildings

Except as otherwise provided for in this Ordinance and in planned developments, every building shall be constructed or erected upon a lot or parcel of land which abuts upon a public street. (Ord. 87-134, 1987)

17.20.120 Building Under Construction

Nothing in this Ordinance shall be deemed to require any change in the plans, construction or designated use of any building upon which actual construction was lawfully begun prior to the adoption of this Ordinance. (Ord. 87-134, 1987)

17.20.130 Building on a Zoning Lot

Except in planned developments, every principal building hereafter erected or structurally altered shall be located on a zoning lot as herein defined and in no case shall there be more than one such building on one zoning lot. (Ord. 87-134, 1987)

17.20.140 Exceptions To District Regulations

The following exceptions are established to provide relief from the zoning regulations where applicable.

A. HEIGHT EXCEPTIONS

The following structures or parts thereof are exempt from the height limitations set forth in the several zones, except as limited by any height restriction imposed by any airport authority or other municipal corporation operating an airport:

1. Agricultural buildings, but not dwellings

2. Bulk storage silos and towers.

3. Gravity feed apparatus.

4. Public utility poles, towers, and wires.

5. Radio and television antennae and towers, provided that a special use permit shall be obtained for any public utility transmitting tower subject to the standards and procedures of this Ordinance.

6. Towers; fire, mechanical and smoke; not to exceed by sixteen feet, the height restriction of the zone in which they are located.

7. Water tanks and standpipes.

8. Solar energy panels and mechanical appurtenances.

9. Parapet walls, chimneys, cooling towers, elevator or mechanical equipment rooms, fire towers and stacks, stage towers and scenery lofts and necessary mechanical appurtenances shall be permitted to exceed maximum height provisions when erected in accordance with all other ordinances of the City of Harvard.

B. YARD AND BUILDING SETBACK EXCEPTIONS

The following structures shall be allowed to project beyond the building setback line, except that in no case shall such structure or component part thereof extend beyond the property line:

1. Air Conditioner: (window) provided that a hot air baffle (up) be installed. Central air, provided it is not located closer than 15 feet to a neighboring residential dwelling and that the hot air is baffled up.

2. Awnings and canopies, not to exceed three feet.

3. Bay windows, not to exceed 2.0 feet.

4. Balconies, not to exceed 2.0 feet.

5. Chimneys not to exceed 2.0 feet.

6. Clothesline post.

7. Composting Devices.

8. Driveways and curbs.

9. Exterior furnace - attached or detached.

10. Fans -- provided that baffles (up) be installed.

11. Fences, walls and hedges in accordance with the Fencing Ordinance.

12. Flagpoles.

13. Garbage Containers, non-permanent.

14. Guardhouse or gatehouse.

15. Islands and pumps for gasoline service station minimum setback of twenty feet.

16. Landscape features.

17. Mailbox.

18. Overhanging roof, eave, gutter, cornice, or other architectural features, not to exceed 3.0 feet.

19. Parking and Loading spaces as regulated in Section 17.32.020.

20. Planting boxes 1.5 feet.

21. Recreational equipment, other than recreational vehicles. Tennis courts, spas and other similar recreation facilities but not swimming pools (See Chapter 19.07 for the swimming pool ordinance)

22. Sidewalks and steps.

23. Signs, as regulated by the Harvard Sign Ordinance.
    Solar Panels - Excluded from front yard.

24. Steps or stairs to a dwelling, non-enclosed.

25. Terraces (open), and porches, non-enclosed.

26. Trees, shrubs, flowers and other plants.

27. T.V. Dish Antennae, excluded from front yard.

28. Yard and service lighting fixtures, poles.

17.20.150 Utility Exemption

In accordance with the Statutes of the State of Illinois, nothing in this Ordinance shall impose restrictions on the type or location of any poles, towers, wires, cables, conduits, vaults, laterals or any other similar distributing equipment of a public utility. (Ord. 87-134, 1987)

17.20.160 Water and Sewer Facilities

Each use hereafter established which require sewerage and water facilities shall be served by public or community sewerage and water systems except as provided in Chapter 13 of the Harvard Municipal Code. (Ord. 87-134, 1987)

17.24
INDUSTRIAL PERFORMANCE

17.24.010 Performance Standards

It is the purpose of this section to establish standards for the installation and operation of industrial uses based upon consideration of the environmental impact of such uses. The standards established herein shall provide the basis for determining the proper zone for particular uses. Uses which cannot meet the minimum standards found herein shall not be considered permitted uses. All uses shall comply at all times with all ordinances of the City.

Any use permitted in the manufacturing districts, whether such use is permitted as a principal or as an accessory use, shall be subject to these standards; further, such use whether a permitted use,

special use, temporary use or non-conforming use shall be subject to these standards regardless of the location or district in which it is located.

The regulations for manufacturing districts are designed to provide for the establishment of a full range of industrial and allied activities and to govern their operations in a manner that will not have a deleterious effect on agricultural, residential, and business areas. It is essential that there are adequate provisions for attracting a diversification of new industry. Adequate industrial sites and industrial expansion will create growth and development of the City's economic and tax base and provide a variety of employment for its labor force. (Ord. 87-134, 1987)

17.24.020 Permit Procedure

Before the Zoning Officer issues a building permit for a use in any M Zone, the applicant shall furnish the Zoning Officer sufficient information to enable the Zoning Officer to assure himself that all performance standards and site development standards set forth in this Ordinance can and will be complied with at all times. The Zoning Officer, in order to determine whether or not the applicant will meet such standards, may require the applicant to submit all or part of the information listed below as appropriate to the particular use or manufacturing process.

A. A plot plan showing the location of all present and proposed structures, drives, parking lots, landscaping, waste disposal areas, bulk storage areas, adjacent structures and zoning, streets, streams or other significant features on or within 200 feet of the proposed site.

B. A description of the activity to be conducted, including the type and size of equipment or machinery to be operated, waste products, external effects or other conditions which are regulated herein; provided, however, that the applicant shall not be required to reveal any trade secrets or sufficient detail with regard to a process which would cause any secret process or manufacturing procedure for a closely guarded proprietary compound or product to become public knowledge and be available to competitors.

C. The type and location of abatement devices to control, or recording instruments to measure conformance with required standards, not including devices and instruments which are inherent in the manufacturing process.

D. All information and evidence submitted in applications to indicate conformity to performance standards shall constitute a certification and an agreement on the part of the applicant that the proposed use can and will conform to such standards at all times. (Ord. 87-134, 1987)

17.24.030 Prohibited Uses

No activities involving the manufacture of materials or products which decompose by detonation shall be permitted in the M-1 and M-2 districts. Such materials shall include, but shall not be limited to, all primary explosives such as lead azide, lead styphnate, fulminates and tetracene; all high explosives such as TNT, RDX, HMX, PETN, and piric acid; propellants and components thereof such as nitrocellulose, black powder, boron hydrides, hydrazine and its derivatives; pyrotechnics and fireworks such as magnesium powder, potassium chlorate, and potassium nitrate; blasting explosives such as dynamite and nitroglycerine; unstable organic compounds such as acetylides, tetrazoles, and ozonides; strong oxidizing agents such as liquid oxygen, perchloric acid,

perchlorates, chlorates, and hydrogen peroxide in concentrations greater than thirty-five percent; and nuclear fuels, fissionable materials and products, and reactor elements such as uranium 235 and plutonium 239. (Ord. 87-134)

17.24.040 Operations Within Enclosed Buildings

A. M-1 Manufacturing District: All activities involving the manufacturing, fabricating, processing, assembling, disassembling, repairing, cleaning, servicing and testing of materials, products and goods shall be conducted within completely enclosed buildings. (Ord. 2009-127,§1)

B. M-2 Manufacturing District: Within 500 feet of any residence district, all activities involving the manufacturing, fabricating, processing, assembling, disassembling, repairing, cleaning, servicing and testing of materials, products and goods shall be conducted within completely enclosed buildings. (Ord. 2009-127,§1; Ord. 87-134, 1987)

17.24.050 Performance Standards - General

A. Any use established in the manufacturing districts after the effective date of the ordinance codified in this chapter shall be so operated as to comply with the performance standards governing:

1. Noise
2. Vibration
3. Smoke and particulate matter
4. Toxic matter
5. Odorous matter
6. Fire and explosive hazards
7. Glare
8. Radiation hazards
9. Landscaping

as set forth in this chapter for the district in which such use shall be located.

B. Uses already established on the effective date of the ordinance codified in this chapter shall be permitted to be altered, enlarged, expanded, or modified provided that the additions or changes comply with said performance standards. (Ord. 87-134, 1987)

17.24.060 Noise Standards

A. For the purpose of measuring the intensity and frequency of sound, the sound level meter, type octave band analyzer, and the impact noise analyzer shall be employed.

B. The flat network and the fast meter response of the sound level meter shall be used. Sounds of very short duration, as from forge hammers, punch presses, and metal shears which cannot be measured accurately with the sound level meter shall be measured with the impact noise analyzer.

C. Octave band analyzers calibrated in the Preferred Frequencies (American Standards Associations 51.6 - 1960 Preferred Frequencies for Acoustical Measurements) shall be used in the table headed "Octave Bank, Pre-1960".

D. The following uses and activities shall be exempt from the noise level regulations:

1. Noises not directly under the control of the property user.

2. Noises emanating from construction and maintenance activities between seven a.m. and nine p.m.

3. The noises of safety signals, warning devices, and emergency pressure relief valves.

4. Transient noises of moving sources such as automobiles, trucks, airplanes, and railroads.

5. The decibel values specified for residence districts shall be reduced by six decibels between the hours of seven p.m. and seven a.m.

6. In the M-1 District, the generation of noise shall not exceed the decibel limits identified in Table 4. (Ord. 87-134, 1987)

7. In the M-2 District, the generation of noise shall not exceed the decibel limits established in Table 5. (Ord. 87-134, 1987)

TABLE 4
M-1 DISTRICT

Maximum Permitted Sound Levels - Decibels (Re. 0002 Microbar)

Octave Band Pre-1960 (cycles per second)	**Neighboring Lot**	**Residence District**
20 - 75	79	72
75 - 150	74	67
150 - 300	66	59
300 - 600	59	52
600 - 1200	53	46
1200 - 2400	47	40
2400 - 4800	41	34
Above	39	32

Octave Band Preferred Frequencies (cycles per second)	**Neighboring Lot**	**Residence District**
31.5	83	76
63	78	71
125	75	65
250	64	57
500	57	50
1000	51	45
2000	46	39
4000	41	34
8000	38	32

Impact noises measured on an impact noise analyzer shall not exceed the following peak intensities:

	Neighboring Lot	**Residence District**
Overall Peak	86	80

TABLE 5
M-2 DISTRICT

Maximum Permitted Sound Levels - Decibels (Re. 0002 Microbar)

Octave Band Pre-1960 (cycles per second)	**Neighboring Lot**	**Residence District**
20 - 75	82	72
75 - 150	77	67
150 - 300	69	59
300 - 600	62	52
600 - 1200	56	46
1200 - 2400	50	40
2400 - 4800	44	34
4800 - 10KC	42	32

Octave Band Preferred Frequencies (cycles per second)	**Neighboring Lot**	**Residence District**
31.5	86	76
63	81	71
125	75	65
250	67	57
500	60	50
1000	54	45
2000	49	39
4000	44	34
8000	41	32

Impact noises measured on an impact noise analyzer shall not exceed the following peak intensities in decibels:

	Neighboring Lot	**Residence District**
Overall Peak	90	80

17.24.070 Vibration Standards

In all manufacturing districts, no activity or operation shall cause or create earthborne vibrations in excess of the displacement values given below:

A. Measurements shall be made at or beyond the adjacent described lot line or the nearest residence district boundary line, as described below in this section.

B. Vibration displacements shall be measured with an instrument or complement of instruments capable of simultaneously measuring in three mutually perpendicular directions. The maximum vector resultant shall be less than the vibration displacement permitted.

$$D = \frac{K}{F}$$

where D = displacement in inches

K = a constant to be determined by reference to the tables below in this section.

F = the frequency of the vibration transmitted through the ground, cycles per second.

C. In an M-1 manufacturing district the maximum earth displacement permitted at the points described in the following table shall be determined by the use of the formula in subdivision A of this subsection and the appropriate K constant shown in TABLE 6.

TABLE 6
M-1 District

Values of K to be Used in Vibrating Formula

Location	**K**
In any Neighboring Lot:	
a. Continuous	0.008
b. Impulsive	0.015
c. Less than eight pulses per twenty-four hour period:	0.037
In any Residence District:	
a. Continuous	0.003
b. Impulsive	0.006
c. Less than eight pulses per twenty-four hour period:	0.015

D. In an M-2 Manufacturing District the maximum earth displacement permitted at the points described below shall be determined by use of the formula in subdivision A of this subsection and the appropriate K constant shown in Table 7. (Ord. 87-134, 1987)

TABLE 7

M-2 District

Values of K to be Used in Vibrating Formula

Location	**K**
In any neighboring lot:	
a. Continuous	0.030
b. Impulsive	0.060
c. Less than eight pulses per twenty-four hour period	0.150
In any residence district:	
a. Continuous	0.003
b. Impulsive	0.006
c. Less than eight pulses per twenty-four hour period	0.015

17.24.080 Smoke and Particulate Matter Standards

A. The emission of smoke or particulate matter in such manner or quantity as to endanger or be detrimental to the public health, safety, comfort, or welfare is declared to be a public nuisance and shall not be permitted in the manufacturing districts.

B. For the purpose of grading the density or equivalent opacity of smoke, the Ringelmann chart described in the U.S. Bureau of Mines Information Circular 6888 shall be employed. The emission of smoke or particulate matter of a density or equivalent opacity greater than No. 2 on the Ringelmann chart is prohibited at all times except as otherwise provided in this section.

C. Dust and other types of air pollution borne by the wind from such sources as storage areas, yards, roads, and the like within lot boundaries shall be kept to a minimum by appropriately landscaping, paving, oiling, fencing, wetting or other acceptable means.

D. The open burning of refuse, paint, oil, debris and any other combustible material is prohibited in all manufacturing districts.

E. No operation shall cause or allow to be emitted into the open air from any process or control

equipment or to pass any convenient measuring point in a breeching or stack, particular matter in the gases that exceeds 0.60 points per thousand pounds of gases during any one hour.

F. Particulate matter loading in pounds per acre described in subdivisions A and B of this subsection shall be determined by selecting a continuous four-hour period which will result in the highest average emission rate.

G. M-1 Manufacturing District. The emission of smoke having a density or equivalent opacity in excess of Ringelmann No. 1 is prohibited; however, for two minutes in any four-hour period, smoke up to and including Ringelmann No. 2 shall be permitted.

H. M-2 Manufacturing District. The emission of smoke having a density or equivalent opacity in excess of Ringelmann No. 2 is prohibited; however, for two minutes in any four-hour period, smoke up to and including Ringelmann No. 3 shall be permitted. The rate of emission of particulate matter from all stacks and vents within the boundaries of any lot shall not exceed three pounds per acre of lot area per hour. (Ord. 87-134, 1987)

17.24.090 Toxic Matter Standards

Performance standards for toxic matter in M-1 and M-2 Manufacturing Districts shall be as follows:

1. The release of airborne toxic matter, including radioactive matter, shall not exceed one-thirteenth of the maximum permissible concentration allowed an industrial worker when measured at any point beyond the lot line, either at ground level or habitable elevation, whichever is more restrictive. Concentrations shall be measured and calculated as the highest average that will occur over a continuous twenty-four hour period.

2. If a toxic substance is not contained in the most recent listing of threshold limit values published by the American Conference of Governmental Industrial Hygienists, the applicant shall satisfy the City health department that the proposed levels will be safe and not detrimental to the public health or injurious to plant and animal life. (Ord. 87-134,1987)

17.24.100 Odor Standards

The release of materials capable of becoming odorous, either by bacterial decomposition or chemical reaction shall meet the standards of the district in which the odor is created.

1. M-1 Manufacturing District: When odorous matter is released from any operation, activity, or use in the M-1 manufacturing district, the concentration of such odorous materials shall not exceed the odor threshold when measured beyond the lot line, either at ground level or habitable elevation.

2. M-2 Manufacturing District: When odorous matter is released from any operation, activity, or use in the M-2 district, the concentration of such odorous materials shall not exceed the odor threshold when measured beyond the M-2 district boundary line.

17.24.110 Fire and Explosion Hazard Standards

A. All flammable solid, liquid, and gaseous substances shall be manufactured, stored, and utilized in accordance with all applicable codes.

B. In all manufacturing districts the storage, utilization or manufacture of solid materials or products ranging from incombustible to moderate burning is permitted.

C. In the M-1 and M-2 Manufacturing Districts, the storage, utilization or manufacture of solid materials or products ranging from free or active burning to intense burning is permitted; provided either of the following conditions is met:

1. Said materials or products shall be stored, utilized, or manufactured within completely enclosed buildings having no less than two-hour fire resistant exterior walls and protected with an automatic fire extinguishing system; or

2. Said materials, if stored outdoors, will be no less than fifty feet from the nearest lot line.

3. In an M-1 Manufacturing District, the storage, utilization, or manufacture of flammable liquids shall be permitted in accordance with TABLE 8, exclusive of storage of finished products in original sealed containers, which shall be unrestricted. Flammable liquid and gas storage tanks shall not be less than fifty feet from all lot lines.

TABLE 8

Storage of Flammable Materials in the M-1 District

	Total Capacity of Flammable Materials Permitted (in gallons)	
	Above Ground (within enclosed building)	**Underground**
Materials having a closed cup flash point over one hundred eighty-seven degrees Fahrenheit but less than three hundred degrees Fahrenheit	20,000	100,000
From and including one hundred five degrees Fahrenheit to and including one hundred eighty-seven degrees Fahrenheit	10,000	100,000
Materials having a closed cup flash point of less than one hundred five degrees Fahrenheit	3,000	100,000

TABLE 9
Storage of Flammable Materials in the M-2 District

	Total Capacity of Flammable Materials Permitted (in gallons)
Industries Engaged in Storage for Resale	**Above Ground**
Materials having a closed cup flash point over two hundred degrees Fahrenheit but less than three hundred fifty degrees Fahrenheit	400,000
From and including one hundred five degrees Fahrenheit to and including two hundred degrees Fahrenheit	200,000
Materials having a closed cup flash point of less than one hundred five degrees Fahrenheit	100,000
TOTAL	700,000
Industries Engaged in Utilization and Manufacture of Flammable Materials where Storage is an Ancillary Use	**Above Ground**
Materials having a closed cup flash point over two hundred degrees Fahrenheit but less than three hundred fifty degrees Fahrenheit	200,000
From and including one hundred five degrees Fahrenheit to and including two hundred degrees Fahrenheit	100,000
Materials having a closed cup flash point of less than one hundred five degrees Fahrenheit	50,000
TOTAL	350,000

D. In an M-2 Manufacturing District the storage, utilization, or manufacture of flammable liquids shall be permitted in accordance with TABLE 9, exclusive of storage of finished products in original sealed containers, which shall be unrestricted. Flammable liquid and gas storage tanks shall not be less than fifty feet from all lot lines.

The quantity of flammable liquids or materials stored below ground shall be unrestricted.

When flammable gases are stored, utilized, or manufactured and measured in cubic feet, the quantity in cubic feet at standard temperature and pressure shall not exceed thirty times the quantities listed in subdivision A of this sub-section. (Ord. 87-134, 1987)

17.24.120 Glare Standards

A. Any operation or activity producing glare shall be conducted so that direct and indirect illumination from the source of light shall not cause illumination in excess of one-half foot-candle when measured in a residence district.

B. Flickering or intense sources of light shall be controlled or shielded so as not to cause a nuisance across lot lines.

C. When street lighting produces illumination in excess of one foot-candle at any point in a residence district the contribution by light sources from within any of the manufacturing districts measured at the same point shall not exceed fifty percent of the street lighting. (Ord. 87-134, 1987)

17.24.130 Radiation Hazard Standards

A. Release Outside Property Lines. In all manufacturing districts, the release of radioactive materials or the emission of ionizing radiation outside of property lines shall be in accordance with the rules and regulations of the State of Illinois.

B. Unsealed Radioactive Materials. In all manufacturing districts, unsealed radioactive materials shall not be manufactured, utilized, or stored, except when such materials are stored in a fireproof container at or below ground level, in excess of the following multiples of the quantities set forth in TABLE 10 of this sub-section. (Ord. 87-134, 1987)

M-1 District	1X
M-2 District	10X

TABLE 10
QUANTITIES OF RADIOACTIVE MATERIALS

Unsealed, Radioactive Material Curies	
Antimony (Sb^{124}) ---------- 1	Phosphorus 32 (p^{32}) ----------10
Arsenic 76 (As^{76})----------10	Polonium 210 (Po^{210}) ----------0.1
Arsenic 77 (As^{77})----------10	Potassium 42 (K^{42}) ----------10
Barium-lanthanum (140 $Bora^{140}$) ---------- 1	Praseodymium 143 (^{Pr143}) ----------10
Beryllium (Be^{7})----------50	Promethium 147(Pm^{147}) ----------10
Cadmium-silver 109 ($CdAg^{109}$) ----------10	Radium 226 (Ra^{226}) ----------0.1
Calcium 45 (Ca^{45})----------10	Rhenium 186 (Re^{186})----------10
Carbon 14 (C^{14})----------50	Rhodium 105 (Rh^{105})----------10
Cerium-praseodymium ($CePr^{144}$) ---------- 1	Rubidium 86 (Rb^{86}) ----------10
Cesium-barium 137 ($CsBa^{137}$)---------- 1	Ruthenium-rhodium 106 ($RuRh^{106}$)---------- 1
Chlorine 36 (Cl^{36}) ---------- 1	Samarium 153 (Sm^{153})----------10
Chromium 51(Cr^{51}) ----------50	Scandium 46 (Sc^{46})---------- 1
Cobalt 60 (Co^{60})---------- 1	Silver 105 (Ag^{105}) ---------- 1
Copper 64 (Cu^{64}) ----------50	Silver ^{111} (Ag^{111}) ----------10
Europium 154 (Eu^{154})---------- 1	Sodium 22 (Na^{22})----------10
Fluorine 18 (F^{18})----------50	Sodium 24 (Na^{24})----------10
Gallium 72 (Ga^{72}) ----------10	Strontium 89 (Sr^{89}) ---------- 1
Germanium 71 (Ge^{71})----------50	Strontium-yttrium (SrY^{90})----------0.1
Gold 198 (Au^{198}) ----------10	Sulfur 35 (S^{35})----------50
Gold 199 (Au^{199}) ----------10	Tantalum 182 (Ta^{182})----------10
Hydrogen 3 (tritium)(H^{3}) ----------250	Technetium 96 (Tc^{96}) ---------- 1
Indium 114 (In^{114})---------- 1	Technetium 99 (Tc^{99}) ---------- 1
Iodine 131 (I^{131}) ----------10	Tellurium 127 (Te^{127}) ----------10
Iridium 192 (Ir^{192}) ----------10	Tellurium 129 (Te^{129}) ---------- 1
Iron 55 (Fe^{55})----------50	Thallium 204(Tl^{204}) ----------50
Iron 59 (Fe^{59})---------- 1	Tin 113 (Sn^{113})----------10
Lanthanum 140 (La^{140}) ----------10	Tungsten 185 (W^{185}) ----------10
Manganese 52 (Mn^{52})---------- 1	Vanadium 48 (V^{48})----------10
Molybdenum (Mo^{99})----------10	Yttrium 90 (T^{90}) ---------- 1
Nickel 59 (Ni^{59}) ---------- 1	Yttrium 91 (Y^{91}) ---------- 1
Niobium 95 (Nb_{95}) ----------10	Zinc 65 (An^{65})----------10
Palladium 109 (Pd^{109})----------10	Beta and/or gamma omitting
Palladium-rhodium 103 ($PadRh^{103}$) ----------50	radioactive material not listed
	above ---------- 1

17.24.140 Landscaping Standards

All yards or other open spaces in a manufacturing district which adjoin a street in or a lot in a residence district shall be appropriately landscaped and thereafter maintained in such a manner as to retain the standards of the initial landscape plan. (Ord. 87-134, 1987)

17.28
FLOOD PLAIN REGULATIONS

Special land use provisions for property located in flood plain or flood hazard areas are contained in Title 18. (Ord. 87-134, 1987)

17.32
OFF-STREET PARKING AND LOADING

17.32.010 Purpose

The purpose of this section is to alleviate or prevent congestion of the public streets and so promote the safety and welfare of the public, by establishing minimum requirements for the off-street parking and loading and unloading of motor vehicles, in accordance with the use to which property is put and the district in which it is located. (Ord. 87-134, 1987)

17.32.020 General Provisions -- Parking and Loading

A. Procedure. An application for a building permit for a new or enlarged building, structure or use shall include therewith a plot plan in duplicate, drawn to scale, and fully dimensioned, showing any parking or loading facilities to be provided in compliance with the requirements of this Ordinance.

B. Extent of Control. All buildings, structures and land uses and all modifications of existing buildings and uses, initiated after the effective date of this Ordinance, shall be provided with accessory off-street parking or loading facilities as required herein, except as provided in Section 17.32.020-G herein, within one year of the effective date of this Ordinance. (Ord. 98-113,§1,1998)

C. Existing Parking and Loading Spaces. Accessory off-street parking and loading spaces in existence on the effective date of this Ordinance may not be reduced in number, except in compliance with the requirements of this section.

D. Permissive Parking and Loading Spaces. Nothing in this section shall prevent the establishment of off-street automobile parking or loading facilities to serve any existing use of land or buildings, subject to the provisions of this section, except that off-street parking areas accessory to existing multiple family structures cannot be located off the premises containing the main use, unless on a lot adjacent thereto.

E. Joint Parking Facilities. Off-street parking facilities for different buildings, structures, or uses, or for mixed uses, may be provided; however, joint parking facilities for similar uses may not be reduced below the number required for all uses. Joint parking facilities for dissimilar uses which require parking at different times during the day may be reduced by not more than twenty-five percent of the required number of spaces where the

Zoning Officer finds that such a reduction will not result in any increased congestion in the public streets and will not otherwise violate the intent and purpose of this Ordinance.

F. Control of Off-Site Facilities. When required accessory parking facilities are provided elsewhere than on the lot on which the principal use served is located, they shall be in the same possession, either by deed or long-term lease, as the property occupied by such principal use, and the owner shall be bound by covenants filed of record in the office of the Recorder of Deeds or the Registrar of Titles of McHenry County, Illinois, requiring the owner and his or her said heirs and assigns to maintain the required number of parking spaces during the existence of said principal use. (Ord. 87-134, 1987)

G. Off-Street Parking. Any parcel of property that has been developed with a residential building and has at least 4,300 square feet of vacant land, shall provide off-street parking on that vacant portion of the property, as required herein. (Ord. 98-113,§2,1998)

17.32.030 Design and Maintenance -- Parking Spaces

A. Parking Space--Description. A required off-street parking space shall be an area of not less than one hundred seventy-one square feet nor less than nine feet wide by nineteen feet long, exclusive of access drives or aisles, ramps, columns, or other obstruction, accessible from streets or alleys or from private driveways or aisles leading to streets or alleys. Aisles between vehicular parking spaces shall be not less than twelve feet in width when serving automobiles parked at a forty-five degree angle in one direction nor less than twenty-five feet in width when serving automobiles parked perpendicular to the aisles and accommodating two-way traffic.
Where appropriate, to facilitate parking of compact automobiles, these standards may be reduced. Up to 20% of required parking spaces may be for compact cars. All parking lot designs shall be approved by the City.

For any use which provides twenty (20) or more spaces, one space designed, reserved and so designated for a motorcycle shall be provided, plus one additional motorcycle space for each additional forty (40) spaces but the total need not exceed five (5). Motorcycle parking spaces shall have minimum dimensions of 4' x 7' and shall not be counted as a parking space for the purpose of this Ordinance.

For any use which provided twenty (20) or more parking spaces, one (1) space designed, reserved or so designated for use by the handicapped shall be provided, 62plus one (1) additional such space for each additional fifty (50) parking spaces. The total number of spaces for the handicapped need not exceed five (5) and shall be located as near the main entrance of the principal use as possible. Each such space shall be at least four (4) feet wider than the minimum design standards for conventional spaces.

Where the provision of off-street parking for fifty (50) or more vehicles is required, there shall be landscaped open space within the perimeter of the parking

area or areas, in the minimum amount of 12% of the entire surface area of the parking lot. The landscaped open space shall be so located that all parking spaces are within eighty (80) feet thereof. The required landscaped open space need not be contiguous, but there shall be in each separate area at least one shade tree and suitable ground cover. All plant materials shall be maintained in a healthy condition and shall be kept pruned to maximize visibility through them between heights of 2-1/2 feet and 7 feet, except where located so as to create no hazard to drivers or pedestrians. Each landscaped area shall be designed and planting materials located in such manner as to reasonably protect the plants from being struck by automobiles.

B. Open and Enclosed Spaces. Parking areas may be open or enclosed.

C. Parking Setbacks, Regulations (Amended Ord.2007-121, §1)

1. Open parking areas are permitted in the required side and rear yards, provided that commercial and industrial parking areas are screened from all adjacent residential zoning districts and institutional uses.

2. Enclosed parking structures shall conform to the regulations established for accessory buildings.

3. Except in a B-3 Commercial District and as provided herein, no parking space or any portion thereof established on the same zoning lot with a building shall be located within a required front yard.

4. Parking lot layout, design and screening solutions shall be approved by the Zoning Officer.

5. Residential Zoning Districts:

a. For purposes of this subsection, rear yard parking area shall mean the area of the driveway between the line extending outward from the rear exterior wall of the principal building and the rear line of the property.

i. A rear yard parking area shall not exceed 342 square feet.

ii. The determination of whether a finished rear yard area is a patio or a rear yard parking area shall be at the sole discretion of the Zoning Officer. Certain factors, but not limited to said factors, which shall be used to determine whether an area is a patio or rear yard parking area are the surface of the area, whether any vehicles could be, are or have been parked on the area, whether any furniture or appliances are placed or installed on the area, whether the area is elevated, whether the area is contiguous with the driveway and whether the area abuts the principal building.

iii. Not more than two vehicles shall be parked in a rear yard parking area at any one time.

b. There shall be a two-foot setback on the driveway from the side and rear property lines. No driveway may be extended to its maximum width if it will fall within any of the two-foot setbacks.

c. Parking in a driveway shall be permitted in the required front and rear yard setbacks for one- and two-family dwellings, providing all other requirements of the Harvard Zoning Ordinance are complied with. Except as provided herein at no point behind the line parallel to the City street and 50 feet from the right of way may the driveway width exceed 24 feet or 33 percent of the lot width, whichever is less.

d. Existing circumstances (as of the effective date of this amendment) may require additional driveway width to comply with City parking ordinances. The Zoning Officer may approve, subject to certain conditions, the widening of a driveway up to an additional nine feet without the need for obtaining a variation pursuant to Section 17.52.040 of this Ordinance.

D. Access. Parking facilities shall be designed with appropriate means of vehicular access to a street or alley in such a manner that will least interfere with the movement of traffic. No driveway or curb cut in any zoning district shall exceed 36 feet in width, except the turning radii and divided entrances/exits with island dividers may be permitted to exceed this distance. (Ord. 2007-121,§)

E. Surfacing. All open off-street parking areas shall be improved with a compacted gravel base and a surface which meets applicable City Ordinances.

F. Screening. All open off-street parking areas, separation islands and access drives for six or more cars shall be effectively screened by a wall, a solid fence, earth berm, or a densely planted compact evergreen hedge along any side which adjoins, or is directly across a street or alley, from a property in a residential district. Such wall, fence or hedge shall be at least five feet in height and shall be maintained at that height in good condition.

G. Lighting. All required open off-street parking areas, other than parking for single family homes, shall be lighted as follows:

a. An average minimum illumination of two foot candle shall be required.

b. Lighting fixtures shall be so arranged as to reflect the light downward and away from residential properties with the source not visible.

c. All lighting cable shall be placed underground and shall be installed in steel conduit (when under pavement) and buried at a depth of two feet.

d. All lighting system designs shall be reviewed for approval by the Zoning Officer.

H. Drainage. All off-street parking facilities shall meet all applicable City Ordinances.

17.32.040 Design and Maintenance -- Loading Spaces

A. Loading Berth--Description. An off-street loading berth shall be a hard-surfaced area of land, open or enclosed, other than a street or a public way, use principally for the standing, loading or unloading of motor trucks, tractors and trailers so as to avoid undue interference with the public use of streets, sidewalks and alleys. A required loading space shall be not less than ten feet in width, forty-five feet in length, and fourteen feet in height, exclusive of access aisles and maneuvering space, except as otherwise specifically dimensioned hereafter.

B. Location. No permitted or required loading berth shall be closer than fifty feet to any property in a residential district unless completely enclosed by solid building walls or fence or any combination thereof not less than six feet in height, and maintained in good condition. No permitted or required loading berth shall be located within twenty-five feet of the nearest point of street right-of-way or the intersection of any two street rights-of-way. Loading berths open to the sky may be located in any required side or rear yards. Where unusual circumstances exist the City may permit loading spaces to be closer to the right-of-way, or may require additional height of fence or screening.

C. Measurement of Berth. When determination of the number of required off-street loading berths results in a requirement of a fractional berth, any fraction up to and including one-half shall be disregarded and fractions over one-half shall be interpreted as one loading berth.

D. Surfacing. All open off-street loading berths shall be improved with a base and surface which meet all applicable City Ordinances. (Ord. 87-134, 1987)

17.32.050 Required Number of Parking Spaces

Table 11, Required Number of Parking Spaces shows the number of spaces required for various types of uses in the district established by this Ordinance. In calculating the total number of spaces, the following rules shall apply:

A. The number of spaces required for a particular use and its accessory uses or components as shown in Columns 3 to 8 is cumulative and the separate requirements shall be added together to determine the total number of spaces required.

B. "Per employee" shall mean the greatest number of employees on any shift or other division of the workday.

C. "Per 100 square feet" shall mean each one hundred square feet of usable area exclusive of storage areas, mechanical equipment rooms, and other areas not normally occupied by either employees or customers, and exclusive of other facilities for which separate parking requirements are established.

D. The design capacity of overnight accommodations shall be taken as the number of beds in a hospital, nursing home, group dwellings or similar facility, or the number of beds in a hotel, motel or similar facility.

E. The design capacity of assembly facilities shall be taken as the total seating capacity in all auditoriums, meeting rooms, grandstands, stadiums, theaters and similar places of assembly.

F. The design capacity of eating facilities shall be taken as the total seating capacity in all dining rooms, taverns, cafeterias and similar rooms. Carry-out eating establishments are required to provide one parking space for each 5 square feet of area provided for customer service.

G. Assembly facilities and eating facilities designed for the exclusive use of employees need not be provided with additional parking spaces. The number of parking spaces required for assembly and eating facilities which are jointly used by customers, guests or patrons of other components of the principal use and the general public may be reduced by an amount not to exceed 50 percent. (Ord. 87-134, 1987)

H. "Medical Professional per 100 square feet" shall be taken as the total square footage of the building or office divided by 100. Such buildings or offices are required to provide .5 parking space for each 100 square feet of the total square feet of the building or office. (Ord. 95-164,§1, 1995)

TABLE 11
REQUIRED NUMBER OF PARKING - REQUIRED SPACES
PER PERSON DESIGN CAPACITY

ZONE/USE	Per Dwelling Unit	Per Employee	Per 100 Sq. Ft.	Overnight Accommodations	Assembly Facilities	Eating Facilities	Medical Professional Per 100 Sq. Ft.
1 / 2	**3**	**4**	**5**	**6**	**7**	**8**	**9**
Residential: A, R-1, R-2, R-3, R-55, R-T							
Residential Uses	2.0	--	--	--	--	--	--
All Other Uses	--	1.0	.2	0.5	0.3	0.3	--
Business: B-1, B-4							
Office Uses	--	1.0	0.4	--	0.3	0.3	5
Retail Uses	--	1.0	0.5	--	--	0.3	--
All Other Uses	--	1.0	0.3	0.5	0.5	0.3	--
Business: B-2							
Residential Uses	1.0	1.0	--	--	--	0.3	--
Office Uses	--	1.0	0.2	--	--	0.3	.5
Retail Uses	--	1.0	0.3	--	--	0.3	--
All Other Uses	--	1.0	0.3	0.5	0.3	0.3	--
Business: B-3							
Residential Uses	1.5	--	--	--	--	--	--
Office Uses	--	0.8	0.4	--	--	--	.5
Retail Uses	--	0.8	0.5	--	--	--	--
All Other Uses	--	0.8	0.3	0.5	0.2	0.1	--
Industry: M-1, M-2							
All Uses	--	1.0	0.1	0.5	0.5	0.3	--

TABLE 12

REQUIRED NUMBER OF LOADING SPACES

REQUIRED SPACES

ZONE/USE	PER FIRST 20,000 SQ. FT.	PER FIRST 50,000 SQ. FT.	PER FIRST 100,000 SQ. FT.	PER ADDTL 100,000 SQ. FT.
Residential: **R-1, R-2, R-3, R-55, R-T**				
Residential Uses	--	--	--	--
Health Care Uses	--	1.0	2.0	1.0
All Other Uses	--	1.0	1.0	1.0
Business: **B-1, B-4**				
Automotive	1.0	2.0	3.0	1.0
Commercial Recreation	--	1.0	1.0	1.0
Commercial Service	1.0	2.0	3.0	1.0
Financial	--	1.0	1.0	0.5
Food Service	1.0	2.0	3.0	1.0
Office	--	1.0	1.0	0.5
Personal Service	--	1.0	1.0	0.5
Retail	1.0	1.0	2.0	1.0
Business: **B-2, B-3**				
Residential	--	--	--	--
Commercial Recreation	--	1.0	1.0	0.5
Commercial Service	1.0	2.0	2.0	1.0
Financial	--	1.0	1.0	0.5
Food Service	1.0	1.0	2.0	1.0
Office	--	1.0	1.0	0.5
Personal Service	--	1.0	1.0	0.5
Retail	1.0	1.0	2.0	1.0
All Other	--	--	2.0	1.0
Industrial: **M-1, M-2**				
Agricultural Uses	1.0	1.0	2.0	1.0
Business Uses	1.0	1.0	2.0	1.0
Commercial Services	1.0	2.0	2.0	1.0
Industrial Uses	1.0	2.0	3.0	1.0
Public Uses	1.0	1.0	2.0	1.0
Transportation Uses	1.0	2.0	3.0	1.0

17.32.060 Required Number of Loading Spaces

Table 12 shows the number of loading spaces required for the various uses in the districts established by this Ordinance. In calculating the total number of spaces required, the following rules shall apply:

1. For uses or buildings, including accessory buildings, having a combined floor area of less than 20,000 square feet, the number of loading spaces shown in Column 4 shall be required.

2. For uses or buildings including accessory buildings having a combined floor area greater than 20,000 square feet, but less than 50,000 square feet, the number of loading spaces shown in Column 4 shall be required.

3. For uses or buildings including accessory buildings having a combined floor area greater than 50,000 square feet, the number of loading spaces shown in Column 5 shall be required.

4. For uses or buildings including accessory buildings having a combined floor area of greater than 100,000 square feet, the number of spaces shown in Column 5 plus the number of spaces shown in Column 6 for each additional 100,000 square feet, or major fraction thereof, shall be required. (Ord. 87-134, 1987)

17.32.070 Sign Regulations

Signs, whether constructed as a principal use or as an accessory use, shall conform to the regulations of the Sign Ordinance of the City of Harvard. (Ord. 87-134, 1987)

17.36
ACCESSORY USES

17.36.010 Uses Permitted as Accessory Uses. The term accessory uses includes, but is not limited to the following:

A. For Residential Uses. Children's playhouse, garden house, private greenhouse, garage, shed or buildings for domestic storage and similar structures are accessory uses. Waste disposal containers shall be enclosed and screened from public view.

B. For Business Uses. Storage building for merchandise or materials normally carried in stock as part of a principal use, off-street parking and loading facilities, garages.

C. For Industrial Uses. Process, production or maintenance facilities clearly subordinate to, and incidental to the principal use; guardhouses, garages, off-street parking and loading facilities, storage buildings.

D. For All Uses. Signs as permitted by the Harvard Sign Ordinance, public utility equipment and supporting structures, other uses meeting the definition of an accessory use in Section 17.56, this Ordinance. (Ord. 87-134, 1987)

17.36.020 Location of Accessory Uses (Ord. 2005-104,§5, 2005)

A. Except as provided in Section 17.36.040-E, no accessory building shall be located in a required front yard in any zoning district. (Ord. 2009-127,§2)

B. Except as follows, no accessory building shall be located in a required side yard in any zoning district:

1. In a business or manufacturing zoning district, an accessory building may be located adjacent to a railroad right-of-way, but only for the purpose of providing a rail loading dock.

2. In a manufacturing district, B-1 Neighborhood Convenience District, B-3 Commercial District, B-4 Commercial Recreation District or Business Park (B-(P) zoning District, an accessory building may be located in a side yard to within 10 feet of any lot line and within 20 feet of any other structure. (Ord. 2009-102, §4)

C. Except as follows, no accessory building shall be located in a required rear yard in any zoning district:

1. In a residential zoning district, an accessory building may be located in a rear yard to within four feet of any lot line.

2. No accessory building shall be located within six feet of a principal building in any residential or business zoning district. An attached accessory shall be considered as part of the principal building, as defined in Section 3 herein.

3. In a manufacturing district or B-1 Neighborhood Convenience District, B-3 Commercial District, B-4 Commercial Recreation District or Business Park (B-P) Zoning District, an accessory building may be located in a rear yard to within 10 feet of any lot line and within 20 feet of any other structure. (Ord. 2009-102, §5)

4. In a business or manufacturing zoning district, an accessory building may be located adjacent to a railroad right-of-way, but only for the purpose of providing a rail loading dock.

17.36.030 Construction of Accessory Buildings

An accessory building shall not be erected prior to the establishment or construction of the main building to which it is accessory. (Ord. 87-134, 1987)

17.36.040 Regulations for Specific Accessory Uses

A. Swimming Pools. Private swimming pools are permitted in any residential zone subject to the regulations of the Swimming Pool Ordinance, Chapter 19.07 of the City of Harvard.

B. Fallout Shelters & Storm Cellars. Fallout shelters and storm cellars are permitted according to regulations delineated in Chapter 15.16.

C. Tents. No tent shall be used, erected or maintained as living quarters. Tents used in commercial or industrial zones or tents used for camping purposes, wherever permitted, shall be of a temporary nature.

D. Customary Home Occupations. Any occupation which is customarily, in whole or in part, conducted in a residence may be conducted in any dwelling unit provided all of the following criteria are met: (Amended Ord. 2004-108,§, 2004)

1. The use for the occupation shall be clearly incidental to the use of the dwelling as a residence.

2. No person other than the proprietor of the business shall be employed in the home occupation.

3. No stock-in-trade shall be displayed or sold upon the premises.

4. No hazard shall be created that would or could endanger the dwelling unit or its occupants or other structures of their occupants by reason of additional fire, health, safety or environmental hazards.

5. No structure or anything exterior to any structure shall indicate that it is being used for any non-residential purpose, except a sign as regulated by the Title 14, Signs, of the Harvard Municipal Code.

6. No mechanical or electrical equipment shall be installed or maintained other than what is customarily incidental to a dwelling unit. No heavy mechanical equipment shall be operated in such a way that it would interfere with the use and enjoyment of neighboring properties or indicate that the structure is being used for a non-residential purpose.

7. A City home use permit shall be required.

8. Except as provided herein no home occupation shall involve the keeping, boarding, kenneling, breeding or caring of any living creature, domestic or wild, other than humans to include, but not be limited to, mammals, fowl, reptile, amphibian or insect. “Caring of” shall not include the following acts or services: grooming, preening, haircutting or trimming, bathing, cleaning, creation of aesthetic enhancements or pedicures. (Ord. 2006-116,§2)

E. Outdoor Storage as an Accessory Use. Any outside storage, display or sales supplemental to the principal use in a B-3 Commercial District for Manufacturing District shall be considered an accessory use and shall be based on the following standards: (Ord 2009-127,§3)

1. A site plan prepared in accordance with the City’s project review standards and guidelines shall be submitted to the Community Development

Department prior to construction and shall demonstrate no negative impact on the surrounding properties.

2. The accessory use shall not interfere with on-site pedestrian and vehicular circulation, nor shall it encroach upon or reduce the number of required parking spaces.

3. All outside areas shall be fenced or otherwise displayed so as to not create a negative impact on the surrounding properties.

4. All activities involving the manufacture, assembly, disassembly, repair, servicing, cleaning and testing of materials, products, vehicles or other goods shall take place solely within an enclosed building.

5. All materials shall be secured so as not to become windblown and all refuse containers shall be screened.

6. All outside storage areas shall be paved with asphalt or concrete, unless the applicant can demonstrate that an alternative surface will not have an adverse impact.

7. Outside storage, display and sales areas, which are accessory to the principal use, shall meet setback requirements for accessory uses in the applicable zoning district.

    a. In the B-3 Commercial District, where a principal building is set back well behind the front yard setback line, display may occur between the front of the building and the setback line only if the applicant can demonstrate there are no adverse impacts.

8. Outdoor storage of bulk materials capable of becoming airborne, including but not limited to coal, sand, sulfur, etc., is prohibited.

17.36.050 Size of Accessory Uses (Amended Ord. 2008-104)

A. Except as provided in Section 17.36.050-C, accessory uses on any lot, other than B-3 Commercial District and manufacturing district lots, shall not exceed 656 square feet; a single accessory use shall not exceed 576 square feet. An accessory building exceeding 8 feet by 10 feet shall be constructed of wood or masonry. (Ord. 2009-127,§4)

B. Except as provided in Section 17.36.050-C, accessory use in any B-3 Commercial District and manufacturing district lots, together with the principal use, shall not exceed the lot coverage requirements established in Section 17.20.080-H herein. (Ord. 2009-127,§4)

C. Accessory uses for all City-owned property shall be exempt from the provisions in this Section 17.36.050 subject to the following conditions:

    1. The accessory uses shall be limited to those used for non-profit purposes

and/or community use; and

2. All plans, schematics and blueprints shall be submitted to and approved by the Community Development Director; and

3. Final placement and permission to erect such accessory uses shall be determined and approved by the City Council.

17.40
TEMPORARY USES

17.40.010 Application

Application for a temporary use permit shall be made to the Zoning Officer, approved by the City Council, and shall contain the following information.

A. A survey or legal description, street address, or other accurate description of the property to be used, rented or leased for the temporary use, including all information necessary to accurately portray the property, including adjacent zoning, land uses and activities.

B. A description of the proposed use.

C. Sufficient information to determine the yard requirements, sanitary facilities and availability of parking space to service the proposed use. (Ord. 87-134, 1987)

17.40.020 Uses Permitted as Temporary Uses

The following are temporary uses and are subject to the following specific regulations and time limits in addition to the regulations of any zoning district in which the use is located:

A. Carnival or Circus. A temporary use permit may be issued for a carnival or circus for a period not longer than fifteen days. (see Table 2)

B. Christmas Tree Sales. In any zoning district, a temporary use permit may be issued for the display and open lot sales of Christmas trees for a period not longer than forty-five days.

C. Contractor's Office and Equipment Sheds. In any zoning district, a temporary use permit may be issued for a contractor's temporary office and equipment sheds incidental to a construction project. The office or shed shall not contain sleeping or cooking accommodations. The permit shall be valid for not more than one year, but is renewable. Storage of flammable liquids, explosives, combustibles or other similar hazardous materials is prohibited, unless authorized in writing by the City. The office or shed shall be removed upon completion of the construction project.

D. Real Estate Sales Office. In any zoning district, a temporary use permit may be issued for a temporary real estate sales office in any new subdivision or planned development which has been approved by the City. The permit shall be valid for not more than one year, but is renewable. The office shall be removed upon completion of the development of the subdivision or planned development. A model home or other structure may be used as a

temporary sales office, except that sleeping and cooking facilities shall not be used.

E. Religious Tent Meeting. In any zoning district, a temporary use permit may be issued for a tent or other temporary structure to house religious meetings for a period of not more than thirty days.

F. Seasonal Sale of Farm Produce. In any zoning district, a temporary use permit may be issued for the operation of a roadside stand for the sale of farm produce grown exclusively on the premises. The permit shall be valid for not more than three months per year. No sales shall be made within thirty feet of any highway or street right-of-way. (See Table 3 - Temporary Uses)

G. Special Promotions. Where one or more business undertakes a special promotion for the sale of goods outside, a temporary use permit shall be required. Such permit shall be for a period of not more than 72 consecutive hours (three days) in any one calendar month.

H. Tent Theater. A temporary use permit may be issued for a tent theater. The permit shall be valid for not more than three months per year. (See Table 3 - Temporary Uses) (Ord. 87-134, 1987)

17.44
CONDITIONAL USES

17.44.010 Purpose

In addition to those uses permitted by right in each district, there are certain other uses which may be permitted by conditional use permit, subject to the provisions in this section. These conditional uses require particular consideration as to their proper location and their relationship to surrounding uses and zoning districts and their impact upon the planned and orderly development of the neighboring property values and the City. (Ord. 87-134, 1987)

17.44.020 Location

Particular conditional uses may be permitted in zoning districts as shown in Section 17.20.100, Table 3, this Ordinance. (Ord. 87-134, 1987)

17.44.030 Standards For All Conditional Uses

The City Council may authorize a conditional use as provided herein upon determining and finding as fact, the following:

A. That the proposed use is necessary or desirable at the location involved to provide a service or facility which will further the public convenience and contribute to the general welfare of the neighborhood or community.

B. That the proposed use will not be detrimental to the value of other properties or improvements in the vicinity.

C. That the proposed use will comply with the regulations of the zoning district in which it is located and this Ordinance generally, including but not limited to, all lot yard and bulk

regulations, parking and loading regulations, sign control regulations and flood plain regulations and all other applicable City Ordinances.

D. That the proposed use shall conform to any stipulations or conditions made a part of a conditional use permit issued for such use.

E. That the proposed use shall conform to the regulations established for specific conditional uses as provided in this section. (Ord. 87-134, 1987)

F. The procedures set forth in Section 17.52.070, requiring a hearing before the Zoning Board of Appeals, in compliance with applicable state statutes, (which require a published notice of the hearing), shall be fully complied with, and the foregoing provisions do not intend to waive same. (Ord. 88-137, §5, 1988)

17.44.035 Compliance and Revocation (added Ord 2014-115)

A. From time to time the Community Development Director or designee may review conditional use permits that have been issued to ensure compliance with any conditions set forth in the original permit. If there is a lack of compliance with specific conditions set forth in the original conditional use permit, said conditional use permit may be revoked.

B. Abandonment: Except as hereafter set forth, if the subject property to which a conditional use permit has been issued discontinues operations on the subject property for a period of 180 consecutive days or whenever there is evidence of a clear intent to abandon the subject property, said conditional use permit shall be subject to revocation. If the discontinued operation is due to fire or other such damage wherein the Building Commissioner deems the subject property uninhabitable, said 180-day period shall be stayed only until occupancy is granted by the Building Commissioner.

C. Notice: When it has been determined that a conditional use has been abandoned the Community Development Director or designee shall send written notice, by certified mail, return receipt requested, to the address listed on the original conditional use permit application or to the address of the subject property as listed on the McHenry County property tax rolls.

D. Appeals: The property owner or applicant may dispute the findings of the Community Development Director of designee pursuant to Section 17.52.050, Appeals, of the Harvard Zoning Ordinance.

E. Should a revocation occur pursuant to this Section nothing shall prohibit the current or any subsequent property owner from applying for a conditional use permit for the subject property, be it the same or any other. Prior revocation proceedings may not be used as evidential testimony for any subsequent conditional use permit hearing.

17.44.040 Application

When seeking to obtain a Conditional Use, pursuant to the required procedures, the owner of the property shall provide the following information, in writing, to the City: (Ord. 88-137, §6, 1988)

A. A survey of the property.

B. A site plan, drawn to scale, showing the location of all proposed structures, driveways, parking areas, and other development features of the proposed use.

C. Additional information as required in this section.

D. Additional information indicating compliance with the regulations of this Ordinance and all other applicable City Ordinances. (Ord. 87-134, 1987)

17.44.050 Standards for Specific Conditional Uses

In addition to the general standards for conditional uses established above, the following conditional uses shall comply with the specific standards herein established. (Ord. 87-134, 1987).

17.44.051 Airports and Heliports

A. The area shall be sufficient and the site otherwise adequate to meet the standards of the Federal Aviation Administration and the Illinois Department of Aeronautics for the class of airport proposed, in accordance with their published Rules and Regulations.

B. Any building, hangar, or other structure shall be at least one hundred feet from any street or boundary line.

C. There shall be an adequate number of off-street parking spaces. The off-street parking design shall be reviewed for approval by the City.

D. If airport zoning is not in effect:

1. Any proposed runway or landing strip shall be situated so that the approach zones are free of any flight obstructions such as towers, chimneys, other tall structures or natural obstructions outside the airport site.

2. There shall be sufficient distance between the end of each usable landing strip and the airport boundary to satisfy the requirements of the Federal Aviation Administration. If air rights or easements have been acquired from the owners of abutting properties in which approach zones fall, satisfactory evidence thereof shall be submitted with the application. (Ord. 87-134, 1987)

17.44.052 Cemetery

A. The site proposed for a cemetery shall not interfere with the development of a system of collector and larger streets, including the enlargement of existing streets, in the vicinity. In addition, the site shall have direct access to a public thoroughfare.

B. Any new cemetery shall be located on a site containing at least ten acres.

C. All burial buildings shall be set back at least eighty feet from any street bounding the cemetery and at least fifty-five feet from all side and rear lot lines. A burial building is any

building used for the internment of bodies or other remains of persons who have died, including mausoleums, vaults or columbaria.

D. All graves or burial lots shall be set back at least thirty feet from any street bounding the cemetery and at least twenty-five feet from all side and rear lot lines.

E. Existing cemeteries may continue to operate in a manner consistent with the existing development in the area presently occupied. Any expansion to land not occupied must comply with the requirements of this paragraph subsequent to the issuance of a conditional use permit.

F. Adequate parking shall be provided on the site, and no cemetery parking shall be permitted on any public street. (Ord. 87-134, 1987)

17.44.053 Drive-In Theater, Summer Theater, Amphitheater

A. The site shall contain at least five acres.

B. The site shall have direct access to a major street.

C. All structures, viewing area, and seating areas shall be set back at least one hundred feet from any street or boundary line.

D. All parking areas and access ways shall be adequately lighted, provided however, that such lighting shall be shielded to prevent glare or reflection onto neighboring properties or public streets.

E. Off-street parking spaces for summer theaters and amphitheaters shall be provided in accordance with the provisions of Section 17.32.

F. The following accessory uses may be permitted as incidental to, and limited to, patrons of the principal use:

1. Amusement park, kiddieland.

2. Refreshment stands or booths.

3. Souvenir stands or booths.

G. For any Drive-in Theater:

1. The theater screen shall not be visible from any collector or major street within 2500 feet. The viewing area shall be screened in such a manner that it cannot be observed from outside the property.

2. Off-street space for automobiles of patrons awaiting admission to the theater shall be equal to twenty percent of the capacity of the viewing area. All entrances and exits shall be separated and internal circulation shall be laid out to provide one-way traffic.

3. All property lines shall be screened to at least six feet in height. (Ord. 87-134, 1987)

17.44.054 Extraction of Earth Products

A. An application for extractive operations shall be accompanied by a map, drawn at a scale of one inch equals 100 feet showing the following:

1. Existing topography at two foot contour intervals.

2. Locations of watercourses and drainage systems.

3. An outline of the area to be excavated.

B. An additional map shown at a scale of one inch equals 100 feet shall show a general plan for proposed operations and rehabilitation of the site including the following:

1. The locations of proposed watercourses and drainage systems, including lakes, ponds, and retention areas.

2. The sequence of operations and the schedule of rehabilitation measures.

3. The proposed locations of sorting, grading, crushing, and similar equipment necessary to the operation and initial distribution of the excavated products.

4. The proposed locations of any buildings, scalehouse, equipment storage areas, and equipment repair sheds or areas.

5. Site rehabilitation plans shall include proposed future land uses, proposed roadways, park lands and recreational features.

6. The operation and rehabilitation of extractive products areas shall be in accordance with the following conditions:

a. Excavation shall not take place within a minimum of one hundred feet of any street or boundary line. Where deep quarrying (30 feet or more) is planned, boundary setbacks shall be a minimum of 150 feet or shall conform to State reclamation standards.

b. Buildings, structures, and storage or repair areas shall be located in conformance with yard requirements of the zone in which they are located.

c. Access ways and roads shall be maintained in a dust-free condition either by oiling or by spraying with calcium chloride.

d. Perimeter roads shall be buffered from extraction activities with earth mounds at least 10' in height which store topsoil. Mounds shall be planted with grass or other suitable material, such as viburnum, as an erosion retardant.

e. All truck loads of extracted materials removed from the site shall be covered

with tarpaulins in conformance to State standards to insure public safety and prevent damage to individuals or other vehicles.

f. All operations shall be conducted in a safe manner, especially with respect to hazards to persons, damage to adjacent lands or improvements, and damage to any street by slides, sinking or collapse of supporting soil adjacent to an excavation. All operations shall be fenced. No extractive operation shall be conducted in a manner so as to lower the water table on surrounding properties.

7. No excavation, removal, or fill shall be permitted if the finished conditions would contain the following:

a. Deep pits having side slopes of greater than thirty degrees.

b. Serious on-site erosion problems or erosion problems which could extend to neighboring properties.

c. Undrained depressions other than artificial lakes, or drainage problems which adversely affect neighboring properties.

8. No processing and stockpiling operations shall be conducted closer than six hundred sixty (660) feet from any estate, residential, commercial or office district or within six hundred sixty (660) feet of any public or private educational facility. All processing operations should be enclosed whenever possible and should be enclosed whenever the operation is to be for a larger period of time than nine (9) months. Stockpile areas shall be screened from view.

No extraction operations shall be conducted in such a manner that the groundwater table of surrounding properties is lowered. This determination is to be made from data secured from testing wells installed, located, operated and maintained by the operator on the perimeter of the excavation area.

a. Conditional Use Permits for the extraction of earth products shall be issued for a period of time not to exceed ten years. Such permits are renewable for additional five-year periods as provided in Section 17.44.054(b)(9). (Ord 2014-127, §1)

b. A corporate surety bond or guaranteed letter of credit shall be furnished to the City to assure compliance with the approved rehabilitation map. The bond or letter of credit shall be in the amount of $100,000 or $1,000.00 per acre, whichever is greater, for the completion of operations and the rehabilitation of the tract. (Ord. 87-134, 1987)

9. Renewals for additional five-year periods shall be governed by the following procedure: (added Ord 2014-127, §2)

Conditional Use Permit

a. In order for administrative renewal to occur, the original property owner or his representative must file a complete application for administrative renewal with the Administrator after the one hundred eightieth (180) day but before the one hundred twentieth (120) day before the expiration of the current Conditional Use Permit time period. The applicant shall pay such fee as may be fixed by City Council pursuant to the Municipal Code. The renewal, if granted, shall be for a five-year (5-year) extension of the Conditional Use Permit. The Conditional Use Permit may be extended in the same manner for five-year (5-year) periods provided the property owner is in compliance with this Section 17.44.054.

b. An Administrative renewal does not result in an amendment to the Conditional Use Permit Ordinance. An applicant seeking to change the Conditional Use Permit conditions or to otherwise amend the Conditional Use Permit Ordinance must go through the procedure for obtaining a new Conditional Use Permit.

c. A sworn application for administrative renewal must be filed with the City. The applicant or its representative shall state that all existing Conditional Use Permit conditions have been complied with, and that no changes to the conditions or other Conditional Use Permit Ordinance provisions are being requested. The application must contain a progress/status of the mining/extraction operation, along with an anticipated date of completion and reclamation. The application shall also contain copies of current state permits and bond certificates along with any other documentary evidence of compliance.

d. Issuance of an administrative appeal is subject to the applicant being in good standing and compliance with statutory and regulatory requirements of the State of Illinois, the Illinois Environmental Protection Agency, the City and other regulatory agencies with jurisdiction over the operation. These requirements shall include, but not be limited to the conditions in the original Conditional Use Permit and payment of the applicable tonnage fees related to the operation, which fees shall be imposed to cover the costs and expenses associated with the disproportionate impact of truck traffic and related repair of roads and other affected public improvements.

e. Failure to timely file a complete application required under paragraph (a) renders the Conditional Use Permit ineligible for administrative renewal. Should an applicant fail to continue a Conditional Use after the initial time period or after renewals expire, a new application pursuant to Section 17.44.054 must be filed.

f. No renewal or expiration of a Conditional Use Permit may occur while the application is pending. If the application is pending at the end of the current time period stated in the Conditional Use Permit Ordinance, the time period shall be extended until such time as the renewal application is acted on by the Administrator.

17.44.055 Planned Development

A. PURPOSE

The regulations contained in this section are established to encourage imaginative design of

coordinated land uses and to provide relief from the subdivision and zoning district requirements which are designed for conventional developments, but which may inhibit innovation and cause undue hardship with regard to the use of parcels which present technical development problems. These regulations are further established to provide a safe and desirable living environment for residential areas characterized by a unified building and site development program, to preserve natural features of the site, and to provide adequate open space for recreation and other community purposes.

B. WHERE PERMITTED

A planned development may be located in any zoning district as shown in Section 17.20.100 Table 3, subject to the procedures and standards set forth below and subsequent to the issuing of a conditional use permit.

C. STANDARDS FOR PLANNED UNIT DEVELOPMENTS

For any planned development, the regulations and standards established in this sub-section may be substituted for the general regulations set forth elsewhere in this Ordinance.

D. REQUIRED SEWER AND WATER

A planned development shall be served by a sanitary sewage system and a public water supply system owned and operated by the City of Harvard, except as provided by the Subdivision Ordinances and Chapter 13 of the Harvard Municipal Code.

E. PERMITTED USES

The following uses are principal uses permitted in a planned development subject to the regulations of this Section:

In any Residential District:

1. Single family detached dwelling.

2. Two family dwellings, patio homes and zero lot line dwellings.

3. Townhouse dwellings, provided, however, that in the R-1 and R-2 zoning districts the number of townhouse dwelling units shall not exceed fifty percent of the total number of dwelling units in the planned development.

4. Multiple-family dwellings, provided, however, that in the R-1 zoning district the number of such units shall not exceed ten percent of the total number of units; and that in the R-2 zoning district the number of units shall not exceed twenty-five percent of the total number of units.

   <u>No apartment of dwelling units located above the first floor shall contain more than two bedrooms.</u>

5. Convenience shopping center provided that in any residential district the total area of such center does not exceed ten percent of the total site.

6. Any retail use as an integral part of a shopping center as provided above.

7. Any office use provided that in any residential district the total area of such use plus all retail uses shall not exceed ten percent of the total site.

8. Any public facility use.

9. Church or other place of worship.

10. Any manufacturing use subject to the performance standards in the M-1 zone.

11. Facilities for the maintenance of the planned development.

IN ANY OTHER DISTRICT

1. Any use permitted in a planned development located in a residential district as provided above.

2. Any business or commercial use permitted in the district in which it is located or any equivalent land area within the planned development provided that the total area of such business or commercial uses does not exceed the total area contained in the Business Districts.

3. Any permitted manufacturing use provided such use shall be subject to the M-1 District performance standards and provided further that the use is either located in a Manufacturing District or within an equivalent land area such that the total area of manufacturing uses does not exceed the area of the Manufacturing District.

F. BASIC DENSITY

The basic density in terms of dwelling units per acre of land permitted in any planned development shall be as shown in Table 13, Basic Density Permitted in Planned Developments.

TABLE 13

Basic Density Permitted in Planned Developments

District	Basic Density (Dwelling Units/Acre)
A	0.2
R-1	3.35
R-2	7.08
R-3	21.70
R-T	8.00
B-1	10.00
B-2	21.70
B-3	10.00
B-4	3.00
M-1	NA
M-2	NA

G. NUMBER OF DWELLING UNITS PERMITTED

The number of dwelling units permitted in a planned development shall be determined by multiplying the basic density as shown in Table 13 by the area of the site less the area of any existing parameter streets or other existing streets or other right-of-way. In the case of a planned development which contains land in more than one zoning district the number of units permitted shall be calculated separately for each district and added together to produce the total number of permitted uses. Land located within any Manufacturing District may be used for any permitted business or manufacturing uses provided, however, that such land shall not be included in the calculation of the total number of permitted dwelling units.

H. MINIMUM SITE AREA

The minimum land area to be included in a planned development shall be four acres.

I. DESIGN STANDARDS

The development plan shall be prepared by professional persons: architects, city planners, engineers, landscape architects and surveyors. The benefits of the planned development and the improved design of the development must justify the intended variation from the normal requirements of this Ordinance. In preparing the development plan, particular consideration shall be given to the following:

1. Open space shall be provided for recreational and other outdoor benefits and activities. At a minimum, twenty percent of the gross site shall be developed for active or passive recreation, detention and other open space uses. The conservation of significant natural features of the site such as flood plains, wetlands, forests, scenic areas and vistas. All such areas shall be considered recreational open space whether

or not they are developed for recreational use or left in a natural state.

2. Maximum separation of vehicular traffic from pedestrial ways and play areas.

3. A unified design based upon significant architectural features, compatible building materials and a distinctive arrangement of structures and open spaces.

4. The provision of adequate sites for retail shopping and service areas, schools, places of worship and other community services where the development is large enough to support these services.

5. The relationship of the development to surrounding uses and property.

6. Surface drainage and storm water detention facilities shall be designed so that the runoff from the developed site shall not exceed the runoff from the site in its natural state during a storm of two year frequency as published by the U.S. Weather Bureau for the Chicago area. The capacity of storm water detention facilities shall be based on a storm of 100-year frequency and the runoff coefficient for the fully developed planned development less the volume of water released based on a storm of two year frequency and the runoff coefficient of the site in its natural state.

7. The flood plain regulations found in Title 18 of the Harvard Municipal Code Book shall apply to all planned developments.

8. Required parking. The off-street parking regulations found in Section 17.32.030 of this Ordinance shall apply to all planned developments.

9. Street improvements. All streets and street improvements shall be designed by a registered professional engineer. The width of streets and the design of the pavement and other structures shall be based upon their intended use and shall be related to the overall design of the planned development. Any street dedicated to the public shall be designed and constructed to the standards of the Subdivision regulations of the City.

10. Required setbacks. All structures located on the perimeter of a planned development shall be set back from the property line or street right-of-way a distance equal to the required setback in the adjacent zone. Interior yards and setbacks shall be in conformity with good site planning practice and shall be equal to, or greater than, the interior yards and setbacks shown on the approved development plan.

11. Height restriction. Any structure within a planned development may be thirty-five feet in height. Further, any structure may exceed thirty-five feet in height provided it does not exceed a height determined by a plane extending inward from the perimeter of the planned development at an angle 30° above the horizontal and, provided further, that no structure shall exceed a height of fifty feet.

J. PRE-APPLICATION FOR A PLANNED DEVELOPMENT

Before submitting an application for a Planned Unit Development, the applicant shall submit

a sketch plan and make an oral presentation of the proposed Planned Unit Development to the Plan Commission and the Zoning Board. The purpose of these presentations shall be to inform the Commission and the Board of the proposed development and the regulations of this section. Recommendations of the Plan Commission and the Zoning Board regarding the design of the planned development and its relationship to the comprehensive plan and its conformance to the standards of this ordinance shall be forwarded to the City Council for consideration. The developer shall make a presentation before the City Council.

The City Council shall review the reports of the Plan Commission and Zoning Board and shall recommend a course of action including any modification of the design of the Planned Unit Development or the standards of this ordinance to be followed in the review and approval of a general development plan should the developer choose to submit one. Once the pre-application procedure is completed an application for a Planned Unit Development may be filed. Applications shall be made in writing and shall be accompanied by a General Development Plan.

K. APPLICATION AND GENERAL DEVELOPMENT PLAN

The general development plan shall include the following:

1. A plat of the site prepared by a registered land surveyor.

2. A topographic map of the site with a contour interval of not more than two feet.

3. A map drawn to scale showing streets, lots, parcels and sites for all uses included in the planned development.

4. Areas to be conveyed, dedicated or reserved for parks, parkways, playgrounds, school sites, public buildings and similar uses or for common areas for the use of the residents.

5. A site plan drawn to scale showing the approximate location of all buildings, structures and improvements other than single-family homes, all lots for single-family homes and indicating the open spaces around buildings and structures.

6. A development schedule indicating:

    a. The approximate date when construction of the project can be expected to begin.

    b. The stages in which the project will be built and the approximate date when construction of each stage can be expected to begin.

    c. The anticipated rate of development.

    d. The approximate date when the development of each of the stages will be completed.

e. The area and location of common open space that will be provided at each stage of development.

L. SUPPORTING INFORMATION

The application and development plan shall be accompanied by the following supporting information:

1. Elevation and perspective drawings in sketch form of all proposed structures and improvements except single family residences and their accessory buildings. The drawings need not be the result of final architectural decisions, but shall be in sufficient detail to accurately portray the buildings proposed.

2. An inventory and evaluation of all significant environmental features of the site including but not limited to lakes, streams, ponds, marshes, wildlife habitat, soil condition, mineral deposits, including sand and gravel, flood plains, wooded areas and plant materials, and including the effect of development on watersheds. The evaluation shall indicate any limitation resulting from natural conditions on the site which would restrict the development of the site for urban purpose permitted under this Ordinance generally, or this section specifically.

3. A written statement containing a detailed explanation of the size and character of the planned development and the manner in which it has been planned to:

   a. Take advantage of the provisions of this section.

   b. Conserve the significant natural features of the site.

   c. Avoid, or otherwise overcome any natural limitations of the site.

4. Agreements, by-laws, provisions or covenants which govern the use, maintenance and continued protection of the planned development and any of its common open areas, streets, parking facilities or other facilities and improvements.

N. APPROVAL OF THE DEVELOPMENT

1. The Plan Commission shall review the development plan and the supporting information, and make its recommendation to the Zoning Board within thirty days after complete information has been received from the petitioner.

2. The Zoning Board shall then conduct a public hearing on the proposed planned development as acted upon by the Plan Commission as provided by law and after payment of the required fees. A copy of the development plan and required supporting information shall be available at the public hearing and in the City Hall subsequent to the publications of the hearing notice. The Zoning Board shall recommend to the City Council approval, or disapproval, of the development plan, or in response to testimony or objections voiced at the public hearing, approval of the development plan with modifications.

3. The City Council shall, by ordinance, approve or disapprove the development plan with modifications or additional specific standards. Upon approval of the development plan, the City Council shall cause to be issued a conditional use permit authorizing the planned development in conformance to the approved development plan.

4. It shall be the duty of the Plan Commission to review all final plans and plats for general conformity with the approved development plan and no plat shall be recorded and no building permit issued except in accordance with final plats and plans approved and signed by the Chairman of the Plan Commission and consent of the City Council.

O. MINOR MODIFICATION OF FINAL PLANS

The City Council may, from time to time, approve minor changes within the project, but such changes shall not be of a nature that would affect the character and standard of the planned development.

P. FAILURE TO BEGIN PLANNED DEVELOPMENT

If no construction has begun or no use established within two years of the starting date established in the planned development schedule, the conditional use permit for the development plan shall lapse upon written notice to the applicant from the City. At its discretion and for good cause; the City Council may extend, for one additional year, the period for the beginning of construction of the first principal building in the planned development. If the conditional use permit lapses under the provisions of this section, the City shall remove the planned development from the zoning map and the zoning regulations applicable prior to the issuance of the conditional use permit shall continue in effect. (Ord. 87-134, 1987)

17.44.056 Senior Housing (Deleted Ord. 98-136,§1,1998)

17.44.057 Adult Business (Ord. 98-108,§2,1998)

A. Purpose and Intent. It is the intent of this Section 17.44.057 to protect and preserve the health, safety, welfare and morals of the citizens of the City by regulating Adult Business within the City.

B. General Standards.

1. A conditional use permit and Adult Business License (Chapter 21.11) must be issued for each Adult Business as defined in Ordinance No. 98-111.

2. Location Restrictions: No Adult Business shall be operated within 1,000 feet of a residential zoning district or within 1,000 feet of the property boundaries of any school, day care center, cemetery, public park, public housing and place of religious worship. The distance limitation shall be measured in a straight line from the lot lines of said Adult Business and applicable residential zoning district, school, day care center, cemetery, public park, public housing and place of religious worship.

3. Only one Adult Business shall be permitted per block face.

4. Sign Requirements: The following sign requirements shall apply to any Adult Business:

   a. All signs shall be flat wall signs.

   b. The amount of allowable sign area shall not exceed one hundred square feet.

   c. Window areas shall not be covered or made opaque in any way. No sign shall be placed in any window. One one-square foot sign may be placed on the door to state hours of operation and admittance to adults only.

5. Advertising: No merchandise or pictures of the products or entertainment on the premises shall be displayed in window areas or any area where they can be viewed from the sidewalk in front of the building.

6. Alcoholic Liquor Prohibited: It shall be unlawful for any Adult Business to sell, distribute or permit beer or alcoholic beverages on the premises.

17.44.060 Public and Private Utilities and Services

Buildings and structures not included in the Illinois Utility Exemption and not specifically permitted as a matter of right in the various zones, pertaining to water, sewage, gas, telephone and electric utilities; and police, fire, radio and television stations, including broadcasting antennae are required to secure a conditional use permit.

A. LOT AREA AND LOCATION

The required lot area and location shall be specified as part of the conditional use permit and be determined in relation to the proposed use, the intensity of such use and the effects of such use upon the environment.

B. FENCING OR SCREENING

If findings indicate that a hazard may result or that interference with the development or use and enjoyment of surrounding properties may ensue, fencing or screening with a densely planted evergreen hedge or other shielding material may be required in a manner consistent with such findings. (Ord. 87-134, 1987)

17.44.064 Nonresidential Parking Lot (Ord. 97-111,§3,1997)

Accessory off-street parking facilities serving nonresidential uses of property may be permitted in the R-1, R-2 and R-3 zoning districts as a conditional use, subject to the following requirements and all other sections of the Municipal Code that pertain to private parking lot standards:

A. The parking lot shall be accessory to and for use in connection with one or more nonresidential establishments located in adjoining zoning districts or in connection with one

or more existing professional or institutional office buildings or institutions;

B. The parking lot shall be used solely for the parking of passenger automobiles;

C. No commercial work or service of any kind shall be conducted on the parking lot;

D. No parking lot shall access a residential area;

E. Each entrance to and exit from the parking lot shall be not less than 20 feet from any adjacent property located in any residential zoning district, except where egress and ingress to the parking lot is provided from a public way or public alley separating the residential areas from the proposed parking lot;

F. The number of parking spaces shall be as required by the Harvard Zoning Ordinance;

G. Parking facilities shall be designed with appropriate means of vehicular access to a street or alley in such a manner that will least interfere with the movement of traffic;

H. No driveway or curb cut in any zoning district shall exceed 25 feet in width;

I. Buffers, not less than 10 feet in depth, shall be on all sides of the parking lot that adjoin a residential district. Buffers must be landscaped (i.e., earthen berm, hedge or fence) and landscaping plans shall be approved by the City Council. Woven wire chain link fence, barbed wire or stockade fencing are strictly prohibited;

J. The parking lot must be located on property which is contiguous to its principal use. For purposes of this section, contiguity shall not be construed to include properties across public streets and rights-of-way unless a variance is granted pursuant to the Harvard Zoning Ordinance.

K. A parking lot shall not be less than 132 feet in width or cover more than 75 percent of the lot;

L. Any lighting used to illuminate a parking lot shall be designed to direct light away from adjoining residential properties and shall be approved by the City Council; and

M. Parking lots shall conform to any further requirements and conditions as may be required by the City Council for the protection of properties adjacent to and in the vicinity of the proposed parking lot.

17.44.068 Tattoo Parlor (Deleted Ord. 2010-117)

17.44.072 Apartments Above First Floor Business Uses (added Ord. 2005-162)

A. Any residential dwelling in the business zoning district shall only be permitted on the second floor, have a minimum floor area of 500 square feet and a maximum of two

bedrooms. Occupancy shall not exceed five persons.

B. Off-street parking shall be provided in accordance with the provisions of Section 17.32 of this Zoning Ordinance.

C. Upon approval of the conditional use permit and prior to occupancy, the residential dwelling unit shall conform to the provisions of Chapter 19, Building Code, of the Harvard Municipal Code. A visual inspection by the City building inspector shall be required and the City building inspector shall be required to provide written confirmation of compliance.

D. In addition to the requirements set forth in Section 17.52 herein all petitions or applications for the conditional use shall contain a floor plan for the proposed residential dwelling unit.

17.48
NON-CONFORMING LOTS, STRUCTURES AND USES
AMENDED ORD. 97-153,§1,1997

17.48.010 Purpose and Intent

In addition to and in support of the purpose and intent for which this Section 17.48 is enacted generally, this Section 17.48 is enacted for the following specific purposes and intent:

A. To establish standards for the continued maintenance and operation of existing non-conforming buildings and structures where the outright or gradual elimination of such buildings and structures would cause undue hardship.

B. To provide for the elimination, over time, of non-conforming uses of lots, structures and buildings which are adaptable to conforming uses.

C. To conserve the existing stock of housing units in older structures and to prevent the deterioration of such structures that results from over development and over use.

D. To preserve the quality of older neighborhoods.

E. To establish procedures for the inspection and restoration of non-conforming uses which are in violation of the provisions of this ordinance and the other land development ordinances of the City. (Ord. 87-134, 1987)

17.48.020 Non-Conforming Lots (Deleted - See Ord. 89-128, 1989; Ord. 89-121, 1989)

17.48.030 Non-conforming Structures Constructed on a Stone, Masonry or Concrete Foundation (CCF)

Any building or other structure, which was constructed on a stone, masonry or concrete foundation, and was established, built, remodeled or enlarged prior to the adoption of the zoning ordinance, or any building or other structure, which was constructed on a stone, masonry or concrete foundation, and was established, built, remodeled or enlarged in compliance with the regulations in effect at the time but which fails to meet the yard height, bulk or similar requirements of the zoning district in

which it is located shall only be used, maintained, remodeled, enlarged or otherwise altered in conformance with the following standards. Building and structures referred to in the preceding sentence shall generally be referred to below as "Non-Conforming Buildings or Structure/CCF." Any building or other structure, which has not been constructed on a stone, masonry or concrete foundation, and is considered a non-conforming building or structure, shall be regulated by Section 17.48.035 herein. (Ord. 92-110, §1, 1992)

A. REPAIR AND ALTERATIONS

1. Repairs and alterations may be made to a Non-Conforming Building or Structure/CCF provided that no structural alterations, which increase the bulk of the building or structure shall be made in or to a Non-Conforming Building or Structure/CCF, all or substantially all of which is designed or intended to accommodate a use not currently allowed in the zoning district in which it is located, except those required by law or except to make the building or structure and the use thereof, conform to the regulations of the zoning district in which it is located. For the purpose of this Section 17.48.030, repairs shall include the replacement of storage tanks where the safety of operation of the installation requires such replacement, and other replacements of, or substitutions for, machinery or equipment not involving structural alterations to the building or structure.

2. Repairs, alterations, and structural changes may be made to a Non-Conforming Building or Structure/CCF, all or substantially all of which is designed or intended for a use permitted in the zoning district in which it is located, provided said repairs, alterations, or structural changes conform to the regulations of the zoning district in which said building or structure is located.

B. ADDITIONS AND ENLARGEMENTS

A Non-Conforming Building or Structure/CCF which is non-conforming as to the yard, lot or bulk regulations and is designed or intended for a permitted use, shall not be added to or enlarged in any manner unless such additions or enlargements thereto are made to conform to all of the regulations of the zoning district in which it is located, and unless such Non-Conforming Building or Structure/CCF, including all additions and enlargements thereto, shall conform to the following:

1. Applicable regulations concerning the amount of lot area provided per dwelling unit, as provided in this Title 17.

2. The allowable floor area ratio, as provided in this Title 17.

3. The allowable gross floor area per establishment, as provided in this Title 17.

4. The parking space requirements contained in Section 17.32.030 herein.

C. RELOCATION OF BUILDING OR STRUCTURE

No building or structure shall be moved in whole or in part to any other location on the same or any other lot unless every portion of such building or structure which is moved, and the

use thereof, is made to conform to all of the regulations of the zoning district in which it is to be located.

D. RESTORATION DAMAGED STRUCTURE

A Non-Conforming Building or Structure/CCF which is destroyed or damaged by fire or other casualty or act of God shall not be restored unless said building or structure, and the use thereof, shall conform to all of the regulations of the zoning district in which it is located. Provided, however, such destroyed or damaged Non-Conforming Building or Structure/CCF may be rebuilt in its pre-destroyed condition upon the following conditions:

(1) Issuance of a building permit;

(2) Compliance with all City ordinances and adopted codes;

(3) Reconstruction of the damaged or destroyed building is substantially completed within one year from the date of destruction or damage and reconstruction is diligently prosecuted to completion. In the event reconstruction is not diligently prosecuted to completion, at the owner's expense, the existing structure shall be removed and the area cleared by the owner. (Ord. 92-110, §2, 1992)

E. DILAPIDATED STRUCTURE

Any non-conforming structure which remains unoccupied for a period of eighteen consecutive months and is in a dilapidated condition or in an unsafe condition as provided in the Building Code of this Code shall be removed.

17.48.035 Non-Conforming Building or Structure

A. Except as prohibited by subsection B of this Section 17.48.035, the following non-conforming building(s) or other structure(s) shall be permitted to continue as non-conforming building(s) or structure(s) pursuant to the requirements of this Section 17.48:

1. Where the building or structure was not constructed on a stone, masonry or concrete foundation and was established, constructed, remodeled or enlarged prior to December 26, 1997, or

2. Where the building or structure was not constructed on a stone, masonry or concrete foundation and was established, constructed, remodeled or enlarged in compliance with Title 17 regulations in effect at the time of its establishment, construction, remodeling or enlargement but which fails to meet the current zoning district requirements in which the non-conforming building or structure is located.

B. The following non-conforming building(s) or structure(s) shall be prohibited; where the non-conforming building or structure is (i) destroyed; (ii) damaged by casualty such as fire, storm or collision and requires repair costs in excess of twenty-five percent of its current fair market value prior to being damaged; or (iii) removed from the premises and the replacement of said non-conforming building or structure exceeds the minimum standards of this Title 17 or causes the property on which it is located to exceed the minimum

standards of this Title 17.

C. Any prohibited non-conforming building or structure shall be removed from the premises within fourteen days of the City mailing notice to the property owner.

17.48.040 Non-conforming Uses

Any use other than a conditional use which was established prior to the adoption of this Title 17 or which was a permitted use in the zoning district in which it was established at the time of its establishment but which is not presently a use permitted in the zoning district in which it is located, may be continued, maintained, enlarged, relocated or discontinued only in accordance with the following standards and regulations. Uses referred to in the preceding sentence shall generally be referred to as "non-conforming uses." (Ord. 92-110, §3, 1992)

A. ADDITIONS OR ENLARGEMENTS

A non-conforming use shall not be enlarged or expanded. For the purposes of this Section 17.48.040, enlargement or expansion shall mean any increase in the floor area occupied by the use beyond the building in which it is located or any expansion onto a lot in any zoning district in which the use would also be a non-conforming use.

B. ALTERATIONS TO STRUCTURES

There shall be no enlargement, expansion, structural alteration or increase in the bulk of a building or structure having a non-conforming use except that such enlargement is in all respects conforming to the regulations of the zoning district in which it is located and the use of such enlarged portion of the structure is a permitted use or a conditional use permitted subject to the issuance of a conditional use permit.

C. DAMAGED OR DESTROYED BUILDINGS

Except as specifically provided for in Section 17.48.035 of this ordinance, any non-conforming use which is caused to be discontinued because its structure was destroyed or damaged by fire, other casualty or act of God, shall not be restored as a continuing non-conforming use unless said building or structure, and the use thereof, shall conform to all of the regulations of the zoning district in which it is located. Provided, however, such destroyed or damaged Non-Conforming Building or Structure/CCF may be rebuilt and the non-conforming use may be continued in its pre-destroyed condition upon the following conditions:

(1) Issuance of a building permit;

(2) Compliance with all City ordinances and adopted codes;

(3) Reconstruction of the damaged or destroyed building is substantially completed within one year from the date of destruction or damage and reconstruction is diligently prosecuted to completion. In the event reconstruction is not diligently prosecuted to completion, at the owner's expense, the existing structure shall be removed and the area cleared by the owner. (Ord. 92-110, §4, 1992)

D. DISCONTINUED USE

1. Except as specifically provided for in Section 17.48.035 herein, whenever any part of a building, structure or land occupied by a non-conforming use is changed to or replaced by a use conforming to the provisions of this Ordinance, such premises shall not thereafter be used or occupied by any non-conforming use, even though the building may have been originally designed and constructed for the prior non-conforming use. (Ord. 99-102,§1,1999)

2. Whenever a non-conforming use of a building or structure, or part thereof, has been discontinued for a period of 12 months or whenever there is evident a clear intent on the part of the owner to abandon a non-conforming use, such use shall not, after being discontinued or abandoned, be re-established, and the use of the premises thereafter shall be in conformity with the regulations of the district.(Ord. 99-102,§1,1999)

3. Where no enclosed building is involved, discontinuance of a non-conforming use for a period of twelve months shall constitute abandonment. (Ord. 99-102,§1,1999)

4. A non-conforming use not authorized by the provisions of the Harvard ordinance in effect at the time this ordinance becomes effective shall be discontinued and not re-established, except when the provisions of this ordinance find the use to be conforming to the district in which it is then located. (Ord. 99-102,§1,1999)

5. The non-conforming use of a unique structure, if abandoned as provided above, may be re-established as the same non-conforming use or as another non-conforming use requiring no physical adaptation of the structure provided such use shall not be expanded or enlarged beyond the size of the original non-conforming use. (Ord. 99-102,§1,1999)

E. CHANGE OF USE

1. The non-conforming use of a building or structure, all or substantially all of which is designed or intended to accommodate a use not currently allowed in the zoning district in which it is located, may be changed to a use allowed in the most restrictive zoning district in which the non-conforming use which presently occupies the building or structure is a permitted or conditional use, or to a use permitted in a more restrictive zoning district. Such a change of use shall not result in the enlargement of the non-conforming use or structure.

2. A non-conforming use shall not be changed to another non-conforming use when such non-conforming use is located in a building or structure, all or substantially all of which building or structure is designed or intended for a permitted use.

3. The non-conforming use of land, not involving a building or structure, which is incidental or accessory to the principal use of the land, shall not be changed to any other use, except to a use permitted in the zoning district in which the land is located.

F. INDUSTRIAL USES

Any industrial use which is a non-conforming use in the zoning district in which it is located shall comply with the industrial performance standards of the M-1 District.

17.48.050 Non-Conforming Accessory Uses

Except as specifically provided for in Section 17.48.035 of this ordinance, any accessory use either permitted or required by this Title 17 which was established prior to the adoption of this Section 17.48 or which was a permitted use at the time of establishment of such accessory use shall be continued, enlarged, replaced or removed in accordance with the following regulations and standards.

A. SIGNS, AWNINGS AND MARQUEES

All regulations regarding non-conforming signs, awnings and marquees, shall be in accordance with the applicable provisions of the Harvard Sign Ordinance (Title 14) (Ord. 88-154,§1,1988; Ord. 88-130, §3, 1988, Ord. 87-134, 1987)

B. OTHER ACCESSORY USES AND BUILDINGS

Any other non-conforming structure or use accessory to either a permitted or a non-conforming use shall be regulated by the provisions of this Section 17.48.050 as they otherwise apply to non-conforming structures and uses.(Ord. 87-134, 1987)

17.48.060 Non-Conforming Residential Uses

Any dwelling which was built or subsequently modified prior to the adoption of this Title 17, which when built, or subsequently modified, was a permitted and legal use in the zoning district in which it is located, and which is now non-conforming only as a result of this Title 17, shall be continued, repaired, remodeled, maintained, relocated or discontinued in accordance with the provisions of Section 17.48.040 herein. Any use which was illegal or not a permitted use at the time the dwelling was built, or subsequently modified, and was illegal immediately prior to the passage of this Title 17, shall continue to be illegal, and the City can take appropriate action to terminate said illegal use. (Ord. 89-122,§1,1989; Ord. 88-130,§5,6,1988)

17.48.070 Standards for Waiver of Non-Conformity Provisions (repealed Ord. 94-152, §3)

17.52
ADMINISTRATION AND ENFORCEMENT

The administration of this ordinance is vested in the office of the zoning officer, the zoning board of appeals, the plan commission and the city council. (Ord. 87-134, 1987)

17.52.010 Zoning Officer

A. APPOINTMENT

The Zoning Officer shall be an employee of the City and shall be appointed by the Mayor and confirmed by a majority of the members of the City Council present and voting on the appointment.

B. POWERS AND DUTIES

The zoning officer shall enforce this ordinance and in furtherance of his authority shall:

1. Determine conformance of applications for zoning certificates with the regulations of this ordinance.
2. Issue all zoning certificates, following approval as required herein, and maintain records thereof.

3. Issue certificates of occupancy, and maintain records thereof.

4. Conduct inspections of buildings, structures, and uses of land to determine compliance with the terms of this ordinance.

5. Receive all documents related to zoning. All applications for amendments, conditional uses or other matters which require zoning board of appeals action shall be forwarded to the board by the city clerk.

6. Maintain permanent and current records of the administration and enforcement of this ordinance, including, but not limited to, all maps, amendments, variations, appeals, and applications therefor and records of hearing thereon, and designate on the zoning district map each amendment thereto.

7. Cause to be published on an annual basis an accurate and up-to-date zoning map as required by law.

8. Decide or make recommendations on all other matters under this ordinance upon which the zoning officer is required to act.

C. ZONING CERTIFICATES

1. No permit pertaining to the use of land or buildings shall be issued by any officer, department, or employee of the city, unless the application for such permit has been examined by the zoning officer and has affixed to it a certificate of the zoning officer that the proposed building or structure and uses comply with all the provisions of this ordinance. Any certificate issued in conflict with the provisions of this ordinance shall be null and void.

2. An application for a zoning certificate for a sue of land, buildings, or structures, which requires compliance with performance standards set forth in this ordinance in manufacturing districts' regulations, shall have affixed to it a certificate of a professional engineer, licensed by the state of Illinois, whose qualifications pertinent to the engineering aspects of the various performance standards regulations have previously been approved by the city council. The zoning officer shall upon receipt of such application approve and authorize the issuance of a zoning certificate, provided there is compliance with all other provisions of this ordinance. Within fifteen days after the date of issuance of such zoning certificate, the zoning officer shall examine said application and if he finds the proposed use of land, building, or structures does not comply with such performance standards or other applicable

regulations of this ordinance, he shall notify the professional engineer and person filing the application, in writing, of his finding. Failure of the professional engineer to show that such application is in compliance or for the applicant to submit a revised application which shows compliance within thirty days of such notifications shall be cause for revocation of the zoning certificate.

3. All applications for zoning certificates shall be accompanied by plans in triplicate, drawn to scale, showing the actual shape, area and dimensions of the lot to be built upon, the exact size and locations on the lot of the existing buildings and accessory buildings and the lines within which the new buildings or structures shall be erected, the existing and intended use of each building or structure, the number of dwelling units or lodging rooms a building is designed to accommodate, location and number of off-street parking and off-street loading spaces, and such other information with regard to the lot and neighboring lots and performance standards as may be necessary to determine and provide for the enforcement of this ordinance. One copy of such plans shall be returned to the owner when such plans shall have been approved by the zoning officer. The lot and locations of the building thereon shall be staked out on the ground before construction is started.

D. CERTIFICATE OF OCCUPANCY

1. No land shall be occupied or used in a manner different than that existing on the date of the passage of the ordinance codified in this ordinance, and no building or structure hereafter erected or altered shall be occupied or used in whole or in part for any purpose whatsoever until a certificate of occupancy shall have been issued by the zoning officer stating that the building, structure, or land improvement complies with all the building and health laws and ordinances, and with the provisions of this ordinance. No change of use shall be made in any building, structure, or land improvement or part thereof, now or hereafter erected or altered, without an occupancy permit having been issued to make such change unless it is in conformity with the provisions of this ordinance and amendments thereto. Nothing in this section shall prevent the continuance of the present occupancy or use of any existing building, structure, or land improvement, except as may be necessary for the safety of life and property.

2. No certificate of occupancy permit for a change of use in an existing building, structure, or land improvement shall be issued until the premises have been inspected and certified by the zoning officer to be in compliance with applicable requirements for the zoning district in which it is located.

3. Applications for a certificate of occupancy shall be made coincident with the applications for a zoning certificate and shall be issued within ten days after the erection or alteration of the building or structure has been completed. A record of all certificates of occupancy shall be kept on file in the office of the zoning officer and copies shall be furnished on request to any person having proprietary or tenancy interest in the land, building, or structure affected.

4. Pending the issuance of a regular certificate of occupancy, a temporary permit may be issued to be valid for a period not to exceed six months from its date, during the

completion of any building, structure, or land improvement, or during partial occupancy thereof. Application for a temporary permit shall be accompanied with a statement covering the items of work to be completed and the reasons the temporary permit is requested. (Ord. 87-134, 1987)

17.52.020 Zoning Board of Appeals

The Zoning Board of Appeals of the City is created in accordance with Illinois Statutes.

A. MEMBERSHIP AND TERM OF OFFICE

The Zoning Board of Appeals of the City as it exists upon the date of adoption of this ordinance and the members of the Zoning Board of Appeals and their terms of office shall remain unchanged. The successor to each member upon the expiration of his term of office shall be appointed to serve for a term of five years. All members shall be appointed by the Mayor and shall be confirmed by a majority of the city Council present and voting on the appointment. One of the members so appointed shall be named as chairman at the time of his appointment, and in the case of vacancy, the Mayor shall designate a chairman which shall be confirmed by a majority vote of the City Council present and voting thereon. The mayor shall have the power to remove any member of the Zoning Board of Appeals for cause, after public hearing. Vacancies on the Zoning Board of Appeals shall be filled for the unexpired term of the member whose place has become vacant.

B. JURISDICTION

The Zoning Board of Appeals is vested with the following jurisdiction and authority:

1. To hear and decide an appeal from any order, requirement, decision, or determination made by the zoning officer or other authorized official of the City having jurisdiction under this ordinance.

2. To hear all applications for variations to the provisions of this ordinance and submit its recommendations to the City Council based upon a finding of fact for the enactment of an ordinance; no variations shall be granted by the City Council until a public hearing has been held thereon by the Zoning Board of Appeals, pursuant to notice and after the filing of a written report by the Zoning Board of Appeals with the City Council.

3. To hold public hearings on matters pertaining to applications for amendments.

4. To hear and decide upon all matters referred to it or upon which it is required to pass under this ordinance.

C. MEETINGS AND RULES

1. All meetings of the Zoning Board of Appeals shall be held at the call of the Chairman and at such time and places within the City as the Zoning Board of Appeals may determine. All testimony by witnesses at any hearing provided for in this ordinance shall be given under oath. The Chairman, or in his absence, the acting chairman, may

administer oaths and compel the attendance of witnesses. All meetings of the Zoning Board of Appeals shall be open to the public.

2. The Zoning Board of Appeals shall keep minutes of its proceedings, showing the vote of each member upon every question, or if absent or failing to vote, indicating such fact, and shall also keep records of its examinations and other official actions. The concurring vote of four members of the Zoning Board of Appeals shall be necessary to reverse any order, requirement, decision, or determination of the Zoning Officer or to decide in favor of the applicant on any matter on which it is authorized by this ordinance to render a decision. Every rule, regulation, every amendment or repeal thereof, and every order, requirement, decision, or determination of the Zoning Board of Appeals shall be a public record. In the performance of its duties, the Zoning Board of Appeals may incur such expenditures as shall be authorized by the City Council.

D. PROCEDURES

1. All petitions or applications, whether of appeal from a decision of the Zoning Officer, for a variation, conditional use or amendment to either the zoning districts or substantive text of this ordinance, shall be brought as follows:

   a. In name of the record title owner or the owner of the beneficial interest, either individually or through their authorized attorneys or agents. If a contract purchases or tenant is involved, either with or without a contingent right, the contract purchaser or tenant shall be named and become a second party to the petition, but such contract purchaser or tenant may not file without the owners.

   b. By a resolution of the City Council authorizing petition to be filed in the name of the City.

   c. By a resolution of either the Zoning Board of Appeals or the Plan Commission requesting the City Council to authorize a petition as provided above.

2. <u>Petition Contents</u>

   There shall be delivered to the City Clerk a petition containing the following:

   a. A brief statement of facts and details necessary for a proper understanding of the petition.

   b. A legal description of the property in question.

   c. In the case of appeals from the decision of the Zoning Officer or other administrative agency of the City, the petition shall set forth in detail the order or decision appealed from and a brief statement of the grounds of the appeal, without undue emphasis or argument.

   d. Petitions for amendment to the zoning districts shall identify the district in

which the property in question is located at the time of the filing of the petition and shall designate the district to which amendment is sought; petitions for amendment to the substantive text
of this ordinance shall contain the proposed substantive changes verbatim.

e. Petitions for variation shall contain a description of the property in question and shall briefly, without undue emphasis or argument, describe the condition of the premises in question and the nature and extent of the proposed variation from the strict application of the terms of this ordinance.

f. In addition to the legal description of the property, all petitions shall include a plat of survey, the street address or other common description of the property and the nearest street intersection. (Ord. 98-136,§7,1998)

3. Notification of Contiguous Property Owners

At the time of the filing of the petition or application for a variation, conditional use or map amendment, the petitioner or his attorney or agent shall furnish the City Clerk with the names and addresses of the persons who have last paid taxes on all property contiguous to or abutting the parcel or parcels in question in the petition, including such taxpayers of record as may own property across the road, street or alley which may abut the premises concerned on one or more sides. It shall then be the duty of the City Clerk to send such persons a copy of the publication notice concerning the hearing by certified mail. Petitioners shall furnish the City Clerk with as many copies of the publication notice as shall be required for this purpose.(Ord. 98-136,§8,1998)

4. Contents of Notice

All publication notices shall contain:

a. A simple description of the property as to area and location of such a nature as to enable the ordinary reader to accurately locate such parcel. The common street address or addresses and property index number (“PIN”) or numbers of all the parcels of the real property contained in the affected area should be included. (Ord. 2012-111)

b. The place of hearing.

c. The relief requested before the zoning board of appeals.

5. Publication
The public notice shall be published at the petitioner's expense, which is included in the zoning fee, in a newspaper of general circulation in the city, not less than fifteen nor more than thirty days prior to the date of the hearing.

6. Objector's Notice

In the event objectors to any petition shall employ counsel to represent them at the hearing, it shall be the obligation of such counsel to notify the petitioner, his agent or

attorney that he has been so retained and will be present to object. Such notice shall be delivered to the petitioner, his agent or attorney not later than four days prior to the scheduled hearing date. Failure of objector's counsel to give such notice shall give the petitioner or his attorney or agent the option to postpone the hearing until another date certain.

7. Continuances Granted

Continuances may be granted upon good cause shown and at the sole discretion of the Zoning Board of Appeals by a majority vote.

E. PUBLIC HEARING

1. The agenda for a public hearing shall be as follows:

(1) Call meeting to order.

(2) Clerk call roll; establish a quorum.

(3) Open hearing (John Q and Jane Q Public
Property location and petition intent)

a. Are parties of interest in the petition present?

b. Have fees been paid?

c. Certificate of Publication noted (newspaper notice no less than 15 days, no more than 30 days notice).

d. Certified notices sent to adjacent property owners.

e. Completed petition entered into the record.

f. Objectors, if any, shall be identified and their names shall be recorded.

g. Supporters, if any, shall be identified and their names shall be recorded.

h. Witnesses shall be sworn in (attorneys need not be sworn in).

i. Presentation of evidence by the petitioners.

j. Questions by Planning and Zoning Commissioners to the petitioners.

k. Presentation of evidence by objectors, if any.

l. Questions by Planning and Zoning Commissioners to the objectors.

m. Testimony, if any, from supporters.

n. Further evidence presented by petitioners; further questions by Planning and Zoning Commissioners to petitioners.

o. Audience participation.

p. Closing arguments, if desired.

q. Vote on petition.

r. Close hearing.

(4). Adjournment

2. Quorum

Any matter coming before the Zoning Board of Appeals by scheduled hearing may be heard by any four or more members of said board. Should any less than four members be present, any petitioner or objector or representative thereof may request a continuance of the matter in order that it may be heard before four or more members of the Zoning Board of Appeals.

3. Meetings

The Zoning Board of Appeals may meet at least once a month for the purpose of voting on all petitions heard during the prior month. Copies of the report of the Zoning Board of Appeals, (see below) shall be made available to the petitioners, their agents or attorneys and to the attorney or agent of the objectors, if any at their request. The Zoning Board of Appeals may postpone or continue its vote or recommendation on any petition for only one of its voting meetings, but a vote or recommendation upon such petition must be made at the next voting meeting thereafter, unless further delay is with the approval of the petitioner, his attorney or agent.

F. REPORTS

The report of the Zoning Board of Appeals shall contain a short summary of the petition, locate the property, and the reasons advanced by the Zoning Board of Appeals for rejecting or approving the prayer of the petition. The report shall also contain the recommendation of the Zoning Board of Appeals and shall indicate the making of a motion, the seconding thereof and all votes for or against the motion. Members not voting or absent shall be recorded. Upon presentation of the report of the Zoning Board of Appeals to the City Council it shall then be the obligation of the City Attorney to submit a suitable ordinance, incorporating the exact findings and to submit a proper ordinance to the City Council to approve the amending or variance of the ordinance.

G. EFFECT OR DENIAL

A petition for variation, amendment or conditional use which shall have been decided by the Zoning Board of Appeals and the City Council, shall not be brought before the Zoning Board of Appeals again, until one year has passed from the date of the first public hearing, unless the prayer of the petition requests a different amendment or variation, or some change in circumstances has affected the status of the property in a substantial manner. Petitioner, his agent or attorney, may present to the Zoning Board of Appeals such reason or reasons as he feels should be sufficient to justify a hearing on the plat or parcel of land in question within the one-year period and it shall be in the discretion of the City Council to allow or disallow such subsequent hearing. (Ord. 87-134, 1987)

No subsequent hearing shall be granted on the grounds of newly discovered evidence unless it affirmatively appears that such newly discovered evidence was not available to the petitioner in the exercise of reasonable diligence prior to the time of the first hearing. (Ord. 87-134, 1987)

17.52.030 Plan Commission

A. MEMBERS

The Plan Commission shall be the Plan Commission of the City as it exists on the date of passage of this ordinance and its members and their terms of office shall remain unchanged by the adoption of this amendment.

B. JURISDICTION AND DUTIES

The Plan Commission shall have the following duties under this ordinance:

1. To review all petitions for annexation and submit recommendations to the City Council. (Ord. 94-152, §4, 1994)

2. To fulfill all duties assigned to them under the subdivision ordinance Chapter 16, as well as 2.46 of the Harvard Municipal Code.

3. To initiate, direct, and review, from time to time, a study of the provisions of the text and the map comprising the zoning ordinance codified in this ordinance, and to make reports of its recommendations to the City Council not less frequently than every five years.

C. PLAN COMMISSION PROCEDURES

1. Review the petition and supporting documentation before the Plan Commission for conformance with the City's Comprehensive Plan.

2. Review any site plan submitted as part of the petition before the Plan Commission in accordance with the applicable standards established in this ordinance.

3. Review any petition and supporting documentation for conformance to generally accepted City planning and development standards.

4. Prepare a written report of its findings and submit such report to the City Council and Zoning Board of Appeals when applicable prior to the holding of a public hearing on the petition. Such report shall contain a determination as to whether or not the proposed petition conforms to the City's Comprehensive Plan including all applicable development standards which are made a part of the City's Comprehensive Plan and a recommendation regarding the approval - with or without modification - or disapproval of the petition.

5. In the event that the Plan Commission report indicates that the petition is in conflict with the comprehensive plan or the development standards adopted as part of the

comprehensive plan then the petition shall not be approved without the affirmative vote of three-fourths of the City Council.

D. PLAN COMMISSION AGENDA

The order of business followed at the public hearings of the Plan Commission shall follow the format set forth for public hearings before the Zoning Board of Appeals as established in section 17.52.010, paragraph E (1) of this ordinance. (Ord. 87-134, 1987)

17.52.040 Variations

The City Council may authorize variations from the provisions of this ordinance as well as the fence, sign, and trailer coach park ordinances where there are practical difficulties or particular hardships in the way of carrying out the provisions of this ordinance. No variations shall be made except in a specific case and after a public hearing before the Zoning Board of Appeals pursuant to notice and after a report has been filed with the City Council by the Zoning Board of Appeals with its findings of fact.

A. STANDARDS

The Zoning Board of Appeals shall not recommend a variation unless it has made findings of fact based upon the evidence presented to it in each specific case that:

1. The property in question cannot yield a reasonable return if permitted to be used only under the conditions allowed by the regulations in the district in which it is located;

2. The plight of the owner is due to unique circumstances;

3. The variation, if granted, will not alter the essential character of the locality; and

4. For the purpose of implementing the provisions of this section, the Zoning Board of Appeals shall also take into consideration the extent to which the following facts favorable to the applicant have been established by the evidence:

    a. The particular physical surroundings, shape or topographical condition of the specific property would result in a particular hardship upon the owner, as distinguished from a mere inconvenience.

    b. The conditions upon which the petition for variation is based would not be applicable, generally to other property within the same zoning classification.

    c. The alleged difficulty or hardship has not been created by the owner of the property or by a previous owner.

    d. The granting of the variation will not be detrimental to the public welfare or injurious to other property or improvements in the neighborhood in which the property is located and will, in general, conform to the intent and purpose of this ordinance.

3. Conditions

The Zoning Board of Appeals may recommend and the City Council may require such conditions and restrictions upon the premises benefited by a variation as may be necessary to comply with the standards set forth in this section to reduce or minimize the injurious effect of such variation upon the property in the neighborhood, and better to carry out the general intent of this ordinance. (Ord. 87-134, 1987)

17.52.050 Appeals

An appeal to the Zoning Board of Appeals may be made by any person, firm, or corporation, or by an office, department, board, or bureau aggrieved by a decision of the zoning officer.

A. APPLICATION

An application for an appeal shall be filed with the City Clerk within forty-five days of the date of the action from which the appeal is being filed. The City Clerk shall forward such application to the Zoning Board of Appeals for processing.

B. STAYING PROCEDURES

An appeal stays all the proceedings in furtherance of the action appealed from, unless the officer from whom the appeal is taken certifies to the Zoning Board of Appeals that by reason of facts stated in the certificate a stay would, in his opinion, cause imminent peril to life or property in which case proceedings shall not be stayed otherwise than by a restraining order which may be granted by the Zoning Board of Appeals or by a court of record on applications, on notice to the officer from whom the appeal is taken and on due cause shown.

C. HEARING AND DECISION

The Zoning Board of Appeals shall fix a reasonable time, not to exceed ninety days, for the hearing of the appeal and give due notice thereof to the parties and decide the same within a reasonable time. The Zoning Board of Appeals may reverse or affirm, wholly or partly, or may modify the order, requirement, decision, or determination as in its opinion ought to be made on the premises and to that end shall have all the powers of the officer from whom the appeal was taken. (Ord. 87-134, 1987)

17.52.060 Amendments

The regulations imposed and the districts created under the authority of this Ordinance may be amended, from time to time, by ordinance in accordance with applicable Illinois statutes. An amendment shall be granted or denied by the City Council only after a public hearing before the Zoning Commission and a report of its findings and recommendations has thereafter been submitted to the City Council. (Ord. 89-157, §1, 1989)

A. DECISIONS

The City Council, upon report of the Zoning Commission and without further public hearing, may grant or deny any proposed amendment in accordance with applicable Illinois Statutes or may refer it back to the Zoning Commission for further consideration. (Ord. 89-157, §1)

B. PROTESTS

In case a written protest against any proposed amendment signed and acknowledged by owners of twenty percent of the frontage proposed to be altered, or by the owners of twenty percent of the frontage immediately adjoining or across the alley therefrom, or by owners of twenty percent of the frontage directly opposite the frontage to be altered, is filed with the City Clerk, the amendment cannot be passed except on the favorable vote of two-thirds of all members of the City Council.(Ord. 87-134, 1987)

17.52.070 Conditional Uses

The formulation and enactment of a comprehensive ordinance is based on the division of the entire City into districts in each of which are permitted specific uses that are mutually compatible. In addition to such permitted, compatible uses, however, it is recognized that there are other uses which it may be necessary or desirable to allow in a given district but which on account of their potential influence upon neighboring uses or public facilities need to be carefully regulated with respect to location or operation for the protection of the community. Such uses are classified as conditional uses in Table 3.

A. DECISIONS

Those seeking a Conditional Use shall initially file a Petition for said relief before the Zoning Board of Appeals, following the procedures required in Section 17.52.020 D. of this Ordinance, and any other procedures that may be required by state law. The Zoning Board of Appeals shall make its recommendation to the City Council. The City Council, upon the report of the Zoning Board of Appeals and without further public hearing, may grant or deny any proposed Conditional Use; set any conditions or terms upon said Conditional Use that the City Council feels appropriate; and may exercise any other rights pertaining to Conditional or Special Uses accorded a municipality by state law. The City Council may also refer the matter back to the Zoning Board of Appeals for further consideration and recommendations, and may again consider the matter after receipt of said further recommendations. (Ord. 88-178,§1, 1988)

B. PROTESTS

In case a written protest against any proposed Conditional Use is filed with the City Clerk, and signed and acknowledged by 20% of those entitled to receive notice of the hearing before the Zoning Board of Appeals, (Section 17.52.020 D.3.), a Conditional Use cannot be passed except upon a two-thirds (2/3) vote of the City Council. (Ord. 88-178, §2, 1988)

17.56
DEFINITIONS

In the construction of this Ordinance, the rules and definitions contained in this section shall be observed and applied, except when repugnant to the context of any provision.

Words used in the present tense shall include the future; words used in the singular number shall include the plural number; and the plural, the singular; and the word "lot" shall include the word "plot"; and the word "shall" is mandatory and not directory; and the words zone, district, or zoning district may be used interchangeably.

1. ACCESSORY BUILDING AND STRUCTURES. A building or other structure located on a lot with a principal use housing an accessory use. Where a substantial part of the wall of an accessory building is part of the wall of the main building or where an accessory building is attached to the main building shall be counted as part of the main building and shall conform to all regulations applicable thereto.

2. ACCESSORY USE. A use which is located on the same lot on which the principal building or use is situated and which is reasonably necessary, incidental and subordinate to the conduct of the principal use.

3. ACREAGE. Any tract or parcel of land having an area of acre or more which is not a part of any plat of record.

4. ALLEY. A public way, not more than thirty feet wide, which affords only a secondary means of access to abutting property.

5. ATTIC. A space beneath the roof of a building above the ceiling of a room, used for storage but not for habitation.

6. AUTOMOBILE REPAIR, MAJOR. Engine rebuilding or major reconditioning of worn or damaged motor vehicles or trailers; collision service including body, frame or fender straightening or repair; and overall painting of vehicles. Said activities shall specifically exclude the operation of a junk yard, which shall be considered to be any lot, accessory building, or structure thereon which is used primarily for buying, selling, exchanging, storing, bailing, packing, disassembling, or handling waste or scrap materials, including vehicles, machinery and equipment not in operable condition, or parts thereof, and other metals, papers, rags, rubber tires and bottles. A junk yard shall include an automobile wrecking yard, the latter being an area of land where three or more inoperable motor vehicles (as defined by state statute) or parts thereof, or inoperable machinery; or equipment or parts thereof, are stored on any land, or in any building or structure used for the wrecking or storing, prior to wrecking, of such motor vehicles, machinery or equipment or parts thereof. Said junk yards and auto wrecking yards, as defined, are prohibited throughout the City and are not permitted uses in any zoning district. (Ord. 88-131, §1, 1988)

7. AUTOMOTIVE USES. Automotive uses shall include all the uses set forth in Table 3 of page 33 of this Zoning Ordinance, but shall specifically exclude the operation of a junk yard or automobile wrecking yard, as defined in Paragraph 6 hereinabove, which uses are prohibited throughout the City, and are not permitted uses in any zoning district. (Ord. 88-131, §2, 1988)

8. BASEMENT. A story partly or wholly underground. Where more than one-half (1/2) of its height is above the average ground elevation, a basement shall be counted as a story for purposes of height measurement.

9. BLOCK. A tract of land bounded by streets or, in lieu of a street or streets, by public parks, cemeteries, railroad right-of-way, shorelines of lakes and centerlines of streams, or a corporate line of the City.

10. BOARDING HOUSE. A building other than a hotel or restaurant where meals are provided

for compensation of three or more persons, but not more than twelve, who are not members of the keeper's family.

11. BUILDABLE AREA. The space remaining on a zoning lot after the minimum yard requirements of this Ordinance have been complied with.

12. BUILDING. Any structure with substantial walls and roof securely affixed to the land and entirely separated on all sides from any other structure by space or by walls in which there are no communicating doors, windows or openings; and which is designed or intended for the shelter, enclosure or protection of persons, animals or chattels. Any structure with interior areas not normally accessible for human use, such as gas holders, oil tanks, water tanks, grain elevators, coal bunkers, oil cracking towers, and other similar structures, are not considered as buildings, but are classified as structures.

13. BUILDING HEIGHT. The vertical distance measured from finished or established grade, at the middle of the front of the building to the highest point of the roof in the case of a flat roof; to the deck line of a mansard roof; and to the mean height level between eaves and ridge of a gable, hip, or gambrel roof; excluding elevator or mechanical equipment rooms; provided that where buildings are set back from the street line, the height of the building may be measured from the average elevation of the finished lot grade at the front of the building. (See Plate 1)

14. BUILDING LINE. A line or lines including the Building Setback line on the horizontal surface of a lot, parallel or nearly parallel to the front, side, and rear lot lines, and located at a distance prescribed by the yard regulations of this Ordinance beyond which no portion of a building may extend except as provided by this Ordinance.

15. BUILDING PRINCIPAL. A building in which is conducted the main use of the zoning lot on which it is situated.

16. BUILDING SETBACK LINE. A line parallel to the front lot line set at a distance regulated by the front yard requirements established by this Ordinance. (See Table 1, Front Yard Column) Where established buildings on platted lots in a block, or 400 feet on either side, having an average front yard setback greater than that required in the Zoning District, the front yard setback requirement shall be the mean average setback of the existing buildings.

17. CHILD CARE FACILITY. An institution providing care for three or more children under the age of six years for periods of time not exceeding twenty-four hours.

18. CITY COUNCIL. The City Council of the City of Harvard, Illinois.

19. CLUB OR LODGE, PRIVATE. A building, lot or other tract of land owned or leased by a not-for-profit association of persons who are bona fide members paying dues to the association and operated for the use and enjoyment of the association.

20. CONVERTED DWELLING. Any dwelling or dwelling unit located in a building or structure which was not originally designed or constructed to contain or include such dwelling or dwelling unit.

21. COVERAGE, LOT. See "Lot Coverage".

22. DAY CARE. An early childhood facility providing care, protection and supervision for minor children less than 24 hours a day, which may or may not offer educational programs as a normal part of each day's activities to children who have reached three years of age as regulated by the Department of Child and Family Services. For the purpose of this Ordinance, Day Care shall refer to facilities commonly known as day care centers, child care centers, nursery schools, day nursery, pre-school and variations thereof, and shall be considered a home occupation for facilities with three or less children. (Ord. 2003-113, §4)

23. DEVELOPMENT: The act or process of dividing a parcel of land into two or more parcels: of erecting, maintaining, relocating, demolishing, using or enlarging any building or structure, an improvement, clearing, grubbing, excavating, filling, managing brush or agricultural uses. (Ord. 2013-127, §3

24. GROUP HOME TYPE 1: A structure or building constructed as a single family residence and used to provide accommodation on a relative permanent basis for up to eight unrelated persons consisting of individuals who are developmentally disabled and who may or may not be undergoing treatment or rehabilitation for their disabilities along with live-in staff who shall be engaged in providing supervision and training. Visiting staff who do not reside within the group home shall not be counted for purposes of determining the number of residents. The purpose of such home shall be to provide these individuals with a place to live, and with training in cooking, housekeeping and other essential skills, the goal being to enable the residents to be more independent. Services provided within a Group Home Type 1 shall be restricted to the residents of the facility. A Group Home Type 1 does not include dormitory uses or accommodations provided for individuals who are students of a college, university, monastery or other educational/institutional use. It does not include residences that serve as an alternative to incarceration for persons convicted of criminal offenses, or residences for persons whose primary reason for placement therein is the treatment of a communicable disease. (Ord. 2014-116, §1)

25. DISTRICT. A division of the geographic area of the City, as shown on the zoning map within the character and intensity of land use is regulated by the terms of this Ordinance. The terms "district", "use district", and "zone" are synonymous.

26. DWELLING. A building or a portion thereof designed or used exclusively for residential occupancy but not including overnight or transient accommodations in hotels, motels and conditional uses. As to those buildings, or portions thereof, used exclusively for a form of residential occupancy for which a conditional use permit is required, the City Council shall determine the appropriate occupancy restrictions and the general occupancy restrictions that may be mandated from time to time by ordinance, will not necessarily be applicable. (Ord. 91-107, §2, 1991, Ord. 88-179, §1, 1988)

27. DWELLING, APARTMENT. A room or suite of rooms in a multiple family dwelling or non-residential building which is arranged, designed, used or intended to be used as a single housekeeping unit. Complete kitchen and bathroom, permanently installed, shall always be included in an apartment.

28. DWELLING, CONDOMINIUM. A building with more than one living unit and each

living unit, consisting of at least one bathroom, kitchen or kitchen area and sleeping area is individually owned and common areas of the building and lot are owned and maintained by those owning individual living units or an association of the property owners. (Ord. 89-140, §1F, 1989)

29. GROUP HOME TYPE 2: A structure or facility for more than two unrelated persons, and live-in staff, which contains common cooking facilities and common living and eating areas including, but is not limited to, convents, residences, , dormitories and rooming houses for developmentally disabled persons, residences for individuals who are undergoing treatment or rehabilitation for disabilities, orphanages and monasteries, but excluding motels, hotels and similar structures. It does not include residences that serve as an alternative to incarceration for persons convicted of criminal offenses, or residences for persons whose primary reason for placement therein is the treatment of a communicable disease or health care facility or special facility created for those with mental or physical disabilities such as nursing homes, sheltered care homes and developmentally disabled group homes. (Ord. 2014-116, §2)

30. DWELLING, MULTIPLE FAMILY. A building or portion thereof, designed or altered for occupancy by three or more families living independently of each other.

31. DWELLING, ONE FAMILY. A building designed exclusively for use and occupancy by one family and entirely separated from any other dwelling by space.

32. DWELLING, TOWNHOUSE. A row or other arrangement of two to eight attached party wall dwellings and each having entrances which provide direct access to outside yards.

33. DWELLING, TWO FAMILY. A building designed or altered to provide dwelling units for occupancy by two families living independently of each other.

34. DWELLING UNIT. One or more rooms that are located in a dwelling, and that are arranged, designed, or used as living quarters for one family only, and containing complete kitchen and toilet facilities, permanently installed.

35. FAMILY. An individual, or two or more persons related by blood, marriage or adoption, or a group of not more than four (4) persons, (excluding servants), not related by blood, marriage or adoption, living together as a single housekeeping unit in a dwelling unit, but not including communes, sororities, fraternities, private clubs, or other organizations with more than four members living together. (89-113, §1, 1989)

36. FARM PETS. Ducks, geese and bantam roosters and chickens, not exceeding 10 pounds in weight, individually, and restricted to parcels zoned R-1 that are not less than 1½ acres in size. (Ord. 92-109,§1,1992)

37. FARMING/AGRICULTURAL USES MAY MEAN (Ord. 2013-127,§3):
    a) A tract or parcel of land on which crops or livestock are raised for a profit
    b) A site where a product is manufactured or cultivated for profit
    c) A tract or parcel of land on which crops are raised for the purpose of livestock feed.
    d) The cultivation or preparation of soil in order to produce a crop for profit or for other than personal consumption.

38. FENCE. See Fence Ordinance.

39. FLOOD BASE ELEVATION. See Title 18.

40. FLOOD PLAIN. See Title 18.

41. FLOOD TABLE LAND. See Title 18.

42. FLOODWAY. See Title 18.

43. FLOOR AREA. The floor area of a non-residential structure is the total usable horizontal area enclosed by the exterior walls of a building, exclusive of basements, cellars, attics and crawl spaces. The floor area of a residence is the total horizontal area of living space enclosed by the exterior walls measured at the outside of such exterior walls, including partitions, closets, bath and utility rooms and the lower level of a tri-level structure but not including unfinished cellars, basements, and attics; garages, breezeways, porches and patios.

44. FLOOR AREA RATIO. A number indicative of the intensity of use of a lot determined by dividing the floor area of any principal building plus the floor area of all accessory buildings by the area of the lot upon which they are located. (See Plate 3)

45. FULLY DEVELOPED LOT OR PARCEL. A parcel of land located within a platted and recorded subdivision, and having all available utilities in place (such as electrical lines, natural gas, potable water lines, sanitary sewer lines, storm sewers and telecommunication lines) (Ord. 2013-127, §3)

46. GARAGE, BUS OR TRUCK. A building which is used or intended to be used for the storage of motor trucks, truck trailers, tractors and commercial vehicles exceeding three quarter ton capacity.

47. GARAGE, PRIVATE. A detached accessory building or portion of the principal building, designed, arranged, used or intended to be used for the storage of automobiles of the occupants of the premises.

48. GARAGE, COMMERCIAL OR PUBLIC. A building, other than a private garage, used for the care, incidental servicing and sale of automobile supplies, or where motor vehicles are parked or stored for remuneration, hire, or sale within the structure, but not including trucks, tractors, truck trailers, and commercial vehicles exceeding one and one-half ton capacity.

49. HOME OCCUPATION. A gainful occupation or profession customarily carried on by an occupant of a dwelling unit as a use wholly within the dwelling unit, which is clearly incidental to the use of the dwelling unit for residential purposes.

50. HOTEL OR MOTEL. A building on one lot in which more than five rooms or suites are reserved to provide living and sleeping accommodations for temporary guests.

51. ILLEGAL CONVERSION. Any converted dwelling which was constructed, remodeled, occupied or however else established in violation of the zoning, building or other codes in effect at the time of its establishment.

52. LODGING OR ROOMING HOUSE. A group dwelling with not more than five guest rooms where lodging is provided for compensation pursuant to previous arrangement, but not open to the public or to overnight guests.

53. LOT. The word "lot" when used alone shall mean a "zoning lot", unless the context of this Ordinance clearly indicates otherwise.

54. LOT, CORNER. A parcel of land situated at the intersection of two or more streets or adjoining a curved street at the end of a block. (See Plate 4)

55. LOT COVERAGE. The area of a zoning lot occupied by the principal building or buildings and accessory buildings. (See Plate 3)

56. LOT DEPTH. The horizontal distance between the front and rear lot lines exclusive of all right-of-way and easements for street purposes, measured in the mean direction of the side lot lines. (See Plate 5)

57. LOT FRONTAGE. The front of a lot shall be that boundary of a lot along a public or private street. For a corner lot the front shall be the narrowest side edge of the lot fronting on a street, provided that the owner may orient his building toward either street. For a lakefront lot the front shall be that boundary abutting the lake. However, all required yards and setbacks shall be provided.

58. LOT, INTERIOR. A lot other than a corner lot, through lot or reversed corner lot. (See Plate 4)

59. LOT LINE, FRONT. The front property line of a zoning lot. Where a lot contains an easement for street purposes across the front of a lot, the edge of the easement shall be considered the front lot line.

60. LOT LINE, REAR. The rear lot line is the lot line, lot lines, or point on the lot most nearly parallel to and most remote from the front lot line. Lot lines other than front or rear lot lines are side lot lines.

61. LOT LINE, SIDE. A lot line common with another lot, or in case of a corner lot in common with a street right-of-way or easement line, and intersecting the front line.

62. LOT OF RECORD. A lot which is part of a subdivision or a parcel of land described by deed and where both the map and the deed were recorded in the Office of the Recorder of Deeds of McHenry County prior to the adoption of this Ordinance.

63. LOT, REVERSED CORNER. A corner lot, the rear of which abuts upon the side of another lot, whether across an alley or not. (See Plate 4)

64. LOT, THROUGH. A lot having frontage on two parallel or approximately parallel streets, and which is not a corner lot. (See Plate 4)

65. LOT WIDTH. The horizontal distance between the side lot lines measured at right angles to

the lot depth at the established front building line. (See Plate 5)

66. LOT, ZONING. A plot of ground made up of one or more parcels which are, or may be occupied by a use building or buildings, including the yards and open spaces required by this ordinance. There shall, however, be only one principal building on each parcel of land. For the purpose of Section 17.20.130 of this ordinance which provides that there is to be only one principal building on each zoning lot, each separate parcel of land shall be considered a zoning lot. (Ord. 89-123,§1,1989)

PLATE 4

TYPES OF LOTS

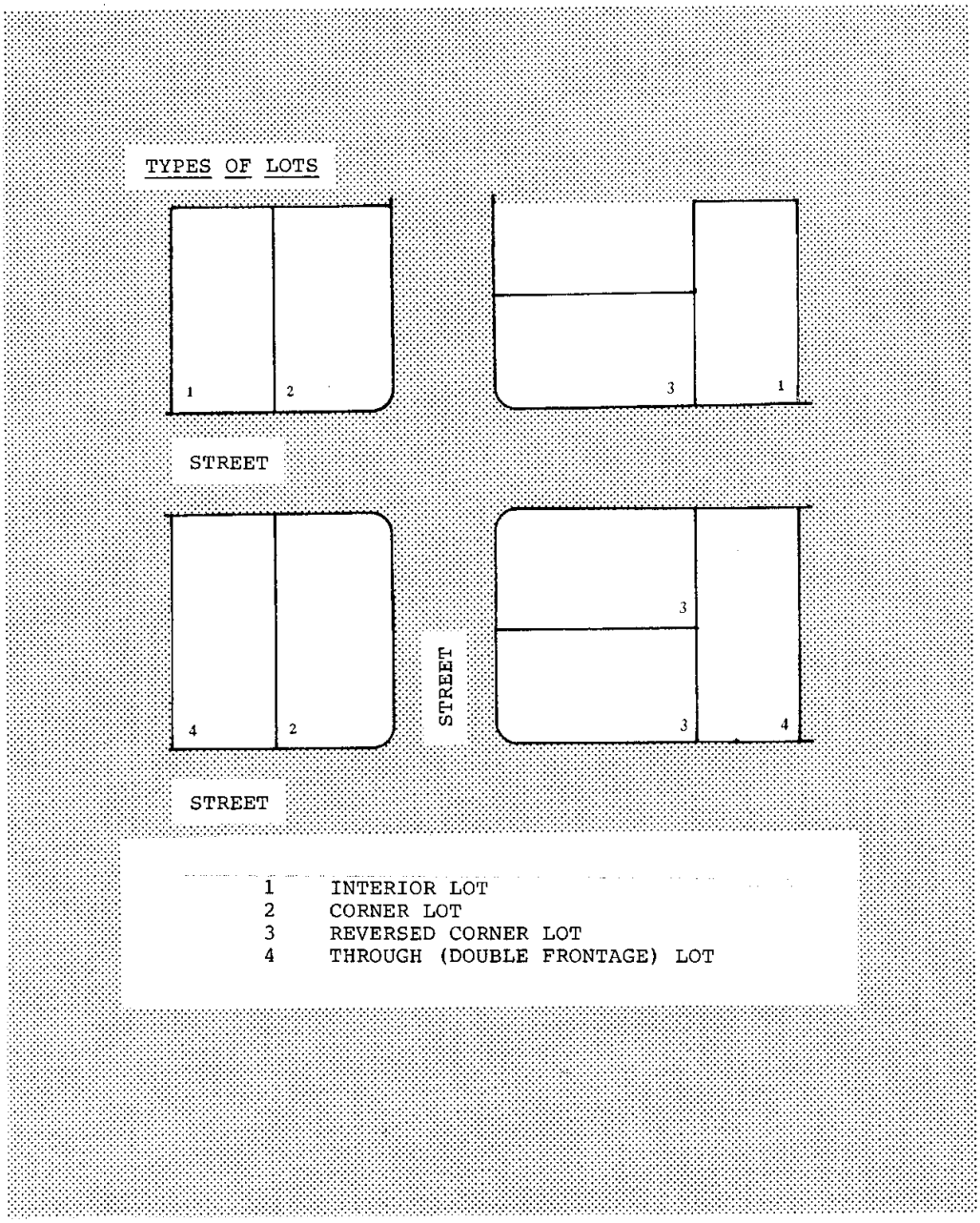

FOR ILLUSTRATIVE PURPOSES ONLY. THIS IS NOT A PART OF THE ZONING ORDINANCE. THE REGULATIONS OF THE ZONING ORDINANCE GOVERN IN ALL CASES.

PLATE 5
LOT DEPTH AND WIDTH

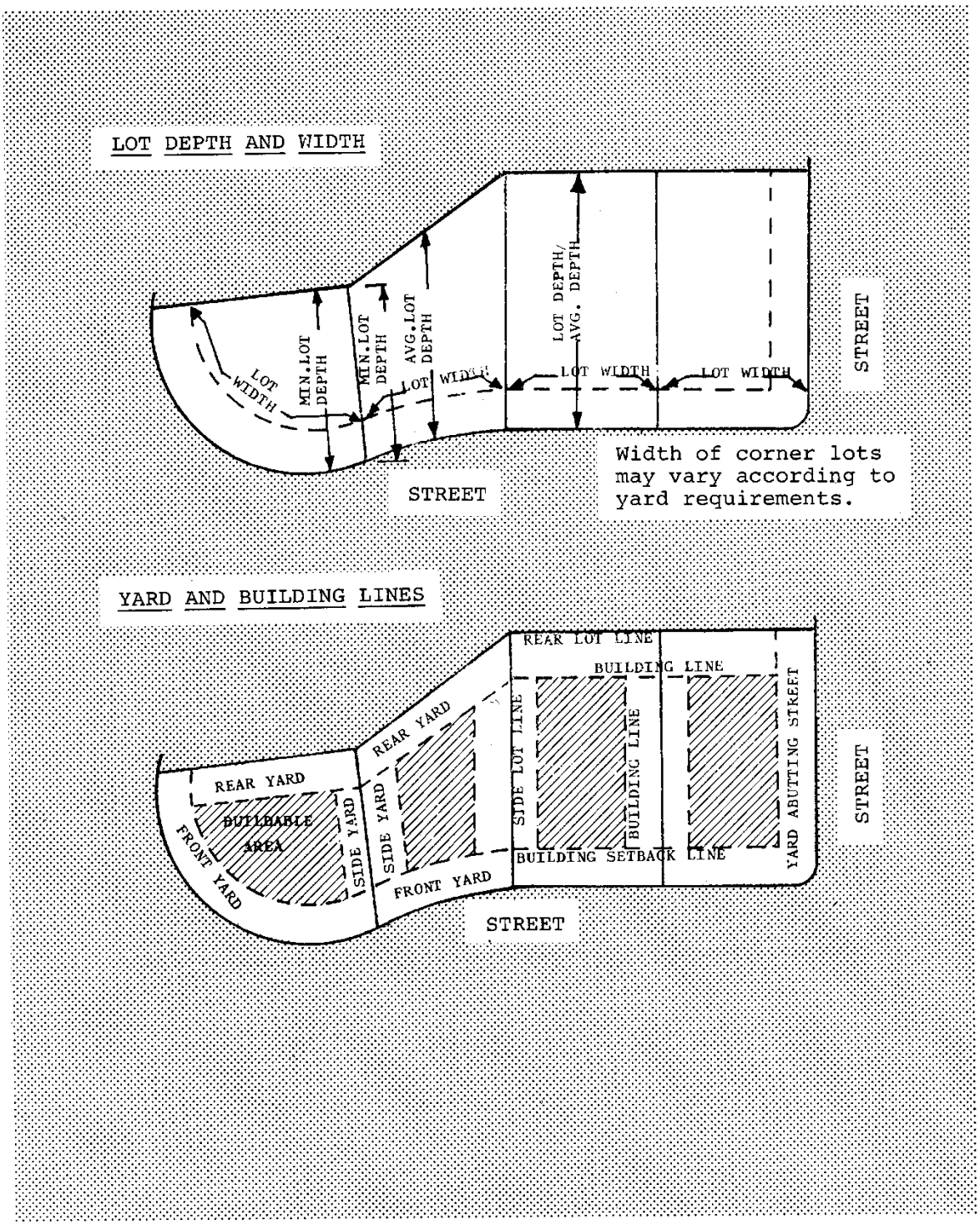

FOR ILLUSTRATIVE PURPOSES ONLY. THIS IS NOT A PART OF THE ZONING ORDINANCE. THE REGULATIONS OF THE ZONING ORDINANCE GOVERN IN ALL CASES.

67. MEDICAL CLINIC. An establishment where human patients and not animals or pets are admitted for diagnosis and treatment by two or more licensed physicians and professional associates who may utilize jointly the same reception area, medical supply, laboratory, auto parking and other physical accommodations. Overnight patient care is not permitted.

68. MOTELS, MOTOR LODGES, TOURIST COURTS. A group of attached or detached buildings containing individual sleeping and living units, designed for or used temporarily by automobile tourists or transients, with garage attached or parking space conveniently located to each unit, including auto courts, motels, or motor lodges, but not including mobile homes.

69. NON-CONFORMING CONVERTED DWELLING. Any converted dwelling which was legally established prior to the adoption of the zoning ordinance or which was established as a permitted use but which is no longer a permitted use in the district in which it is located. A non-conforming converted dwelling is a legally permitted use subject to the provisions of this article.

70. NON-CONFORMING CONVERTED STRUCTURE. This is a structure, containing a converted dwelling, which was constructed prior to the adoption of the zoning ordinance or which conformed to the requirements of the zoning ordinance at the time of its construction but which does not meet the yard, height or bulk requirements of this ordinance of the district in which it is located.

71. NURSING HOME OR SHELTERED CARE HOME. A private home or institution licensed by the State of Illinois for the care of children or the aged or infirmed, or a place of rest for those suffering bodily disorders, but not including facilities for the treatment of sickness or injuries or surgical care.

72. PARKING AREA, PRIVATE. An open, hard-surfaced area of land, other than a street or public way, designed, arranged and made available for the storage of private passenger automobiles only, for occupants of the building or buildings for which the parking area is developed and is accessory.

73. PARKING AREA, PUBLIC. An open, hard-surfaced area other than a street or public way, intended to be used for the storage of passenger automobiles and commercial vehicles under three quarter ton capacity, and available to the public.

74. PERSON. Any individual, partnership, corporation, firm or other entity.

75. PLAN COMMISSION. The Plan Commission of the City of Harvard.

76. PLANNED DEVELOPMENT. A planned development is a real estate development characterized by a mixture of principal uses or dwelling types and a development plan which is specifically adapted to the conditions of the site. The development plan may vary from the specific standards of the zoning district in which the planned development is located provided the other requirements for planned developments established by this Ordinance and the Subdivision Ordinance are met. See Section 17.44.056.

77. PUBLIC UTILITY. A private business, organization, regulated by the State of Illinois, which provides an essential service or commodity, such as water, electricity, transportation or communication, to the consuming public.

78. RAILROAD RIGHT-OF-WAY. A strip of land with tracks and auxiliary facilities for track operation, but not including land used or to be used for depots, loading platforms, stations, train sheds, warehouses, car shops, car yards, locomotive shops or water tower.

79. RETAIL. The sale of commodities in small quantities or the offering of a personal service directly to the consumer. The term retail, when applied to uses in this Ordinance, shall include the production of goods or services to be offered at retail on the premises or in associated off-premises outlets owned and operated by the owner of the principal use in question, as in the case of a retail bakery where baking is done on premises or a laundry or dry cleaning establishment with processing on premises. The term retail, when used in this sense, specifically excludes any production or processing for wholesale purposes or distribution to other retailers.

80. SET BACK LINE, BUILDING. See Building Setback Line.

81. SHELTERED CARE HOME. See Nursing Home or Sheltered Care Home.

82. SIGN. See Sign Ordinance.

83. SPECIAL USE. A conditional use as regulated by this Ordinance.

84. STORY. That portion of a building included between the surface of the floor next above it, or if there be no floor above it, then the space between the floor and ceiling above it. Any basement or cellar with more than one-half of its height above the average level of the adjoining ground shall be considered a story for the purposes for both height and area measurements.

85. STORY, HALF. A half story is that portion of a building under a gable, hip or mansard roof, the wall plates of which, on at least two opposite exterior walls, are not more than four and one-half feet above the finished floor of such story.

86. STREET. Any public or private way other than an alley.

87. STRUCTURE. Anything constructed or erected upon the ground and attached to the ground or located upon or attached to another structure.

88. TOURIST HOME. A dwelling in which accommodations are provided or offered for transient guests.

89. UNIQUE BUILDING OR STRUCTURE. A structure designed for a particular use such that the cost of adapting the structure for any other use involves the modification of the existing structure to an extent that the cost of such modification is at least equal to the replacement cost of the structure.

90. YARD. An open space on zoning lot which is unoccupied and unobstructed from its lower

level upward, except as otherwise permitted in this Ordinance, and which extends along a lot line and at a depth or width specified in the yard regulations for the district in which the lot is located.

91. YARD, FRONT. An open space extending across the full width of the zoning lot and lying between the front line of the lot and the nearest building line.

92. YARD, REAR. An open space extending across the full width of the zoning lot and lying between the rear line or lines of the lot and the building line.

93. YARD, SIDE. An open space extending along each side lot line between the front yard and rear yard.

94. ZONING DISTRICT. A district as defined in this section.

95. ZONING LOT. See LOT, ZONING, this section. (Ord. 87-134, 1987)

17.60
FEES

Fees for zoning certificates, occupancy permits, other certificates and permits and application fees for amendments, variations, conditional uses, and appeals, shall be as established by ordinance of the City of Harvard, including those fees set forth in Chapter 20 of this ordinance. (88-169, §2, 1988)

17.70
VIOLATIONS AND PENALTIES

Any person who violates any provision of this ordinance shall be fined not less than $25.00 nor more than $500 and each day upon which such a violation occurs shall constitute a separate offense. (Ord. 87-134, 1987)

17.80
SEVERABILITY

If any section, sub-section, paragraph, item, sentence or phrase of this ordinance should be declared invalid by a court of competent jurisdiction for any reason whatsoever, such decision shall not affect the remaining portions of this ordinance which shall remain in full force and effect; and to this end the provisions of this ordinance are hereby declared to be separable. (Ord. 87-134, 1987)

17.90
REPEAL

All ordinances or part of ordinances in conflict with the terms of this ordinance are, to the extent of such conflict, hereby repealed. Title 17 of the Harvard Municipal Code, zoning is specifically repealed. All sign, trailer park and fence ordinances are separate ordinances in Title 17 outside of the regular zoning ordinance. (Ord. 87-134, 1987)

17.100
EFFECTIVE DATE

This ordinance shall be in full force and effect from and after its passage, approval and publication in pamphlet form as provided by law. (Ord. 87-134, 1987)

17.110
HARVARD FENCE ORDINANCE

This ordinance shall be known, cited and referred to as the "Harvard Fence Ordinance". (Ord. 87-134, 1987)

17.110.010 Purpose

This ordinance is adopted for the following purposes:

A. To regulate the height and placement of fences in residential, commercial and business districts.

B. To define the various types of fences.

C. To establish standards for construction, erection, and maintenance of fences. (Ord. 87-134, 1987)

17.110.020 Definitions

As used in this Chapter, the following terms shall have the following meanings "Fence":

A. Fence means a structure, including gates, or tree or shrub hedge which is a barrier and used as a boundary or means of protection or confinement.

B. “Open Fence” means a fence which has over its entirety at least 50 percent of the surface area in open space as viewed at right angles from the fence. (Ord. 2008-132,§1)

C. "Solid Fence" means a fence which conceals from view, from adjoining properties, streets, or alleys activities conducted behind it. (Ord. 87-134, 1987)

17.110.030 Open Fences

A. Open fences shall not be more than six feet in height in any residential district except that in a front yard the height shall not exceed 42 inches. Open fences in any business or manufacturing district shall not exceed eight feet in height. Heights of fences shall be measured at the natural average grade. Open fences may be set on the lot line, excepting in a front yard where the fence but be no closer than 2 feet from the lot line. (Ord. 2008-132, §3; Ord. 99-101,§1,1999)

B. "Fence" includes gates and any tree or shrub hedge which is a barrier and used as a boundary or means of protection or confinement; however, shrub fences will not be considered as fences when used as a buffer zone between commercial, industrial, and residential; a solid fence must be constructed where screening is required.

C. No fence shall be constructed or erected until a building permit has been issued and the fee for said permit paid; no fence shall be constructed within a public way or public utility easement; no fence shall be constructed of barbed wire, iron spikes or other sharp pointed instruments or barbed plants, nor shall any fence be erected which is connected in any way

to any source of electricity; nor shall any snow fences, farm fences or chicken wire bag fences be allowed; all fence posts shall be decay or corrosion resistant and shall be set in concrete bases.

D. An accurate sketch showing the proposed location of the fence on the premises shall be furnished to the Building Officer at the time application is made for the permit to erect a fence.

E. It shall be unlawful for the owner, occupant or person in custody of any premises in the City, having a fence thereon, to permit such fence to exist in a state or condition which is liable to cause injury to any person or to property, or which is liable to collapse, or which encroaches upon or leans upon the premises of another or to property. (Ord. 87-134, 1987)

17.110.040 Solid Fences

A. Solid fences shall not be more than six feet in height in any business district or residential district and not more than eight feet in height in any manufacturing district. A solid fence shall not be erected in a front yard. Solid fences are permitted on the lot line or along access strips backing thoroughfares providing written permission from the utility company and/or easement holder has first been obtained. (Ord. 2008-132, §4; Ord. 99-107, §1, 1999; Ord. 90-140, §2, 1990; Ord. 89-140, §1G, 1989)

B. No fence shall be constructed or erected until a building permit has been issued and the fee for said permit paid; no fence shall be constructed of barbed wire, iron spikes or other sharp pointed instruments or barbed plants nor shall any fence be erected which is connected in any way to any source of electricity; all fenceposts shall be decay or corrosion resistant and shall be set in concrete bases.

C. An accurate sketch showing the proposed location of the fence on the premises shall be furnished to the Building Officer at the time application is made for the permit to erect a fence. The sketch shall show the location of any utility easements on the property. (Ord. 99-107,§2, 1999)

D. It shall be unlawful for the owner, occupant or person in custody of any premises in the city having a fence thereon, to permit such fence to exist in a state or condition which is liable to cause injury to any person
or to property, or which is liable to collapse, or which encroaches upon or leans upon the premises of another.

E. Solid fences shall also be required for swimming pools, according to Harvard Municipal Code 19.07. (Ord. 87-134, 1987)

17.110.050 Variations

The City Council may authorize variations from the provisions of this ordinance according to procedures delineated in Section 17.52.040 of the zoning ordinance. (Ord. 87-134, 1987)

17.110.060 Restrictions

A. Those fences existing in front yards that are legal non-conforming on the effective date of this Section shall be completely removed when more than 50 percent of said fence has been damaged or is in a state of disrepair. Other than routine maintenance, alterations, structural changes and additions to such non-conforming fences is prohibited. (Ord 2008-132, §2)

B. For the purposes of this Section, on a corner lot, any yard abutting a roadway should be considered a front yard. (Ord 2008-132, §2)

17.130
HARVARD MOBILE HOME PARK REGULATIONS
AMENDED ORDINANCE 97-153,§3,1997

17.130.010 Purpose

This Section 17.130 is adopted after a public hearing was held before the Harvard Zoning Board of Appeals on November 24, 1997, and after a public hearing was held before the Harvard Zoning, Planning, and Ordinance Committee at Harvard City Hall on October 26, 1996. The purpose of this public hearing was to elicit testimony from various individuals about Mobile Home Parks to enable the City to draft a new Mobile Home Park Ordinance which would better insure the safety and security of individuals living in Mobile Home Parks in the City. In addition, the hearing provided an opportunity to existing Mobile Home Park owners to respond to the proposed amendments relating to Mobile Home Parks. This Ordinance is therefore adopted for the following purposes:

A. To permit the operation of Mobile Home Parks in existence and operating at the time of passage of this Ordinance.

B. To insure compliance with State of Illinois Statutes.

C. To insure the safety and security of residents of Mobile Home Parks.

D. To establish minimum standards for Mobile Home Sites in Mobile Home Parks.

17.130.020 Definitions

For the purpose of this Section 17.130.020, certain words and phrases are defined as follows:

A. "Department" means the Department of Building Inspections of the City.

B. "Mobile Home(s)" means a structure designed for Permanent Habitation and so constructed as to permit its transport on wheels, temporarily or permanently attached to its frame, from the place of its construction to the location or subsequent locations, at which it is intended to be a Permanent Habitation and designed to permit the occupancy thereof as a dwelling place for one or more persons; the structure shall continue to be a "Mobile Home" even though it may be served by individual utilities and rest on a permanent foundation, with wheels,

tongue and hitch permanently removed.

C. "Mobile Home Park(s)" means a tract of land or two or more contiguous tracts of land upon which five or more independent Mobile Homes are located for Permanent Habitation either free of charge or for revenue purposes, and shall include any building, structure, tent, vehicle or enclosure used or intended for use as a part of the equipment of such Mobile Home Park.

D. "Permanent Habitation" means a period of 30 days.

B. "Site(s)" means the lot on which the Mobile Home is located for Permanent Habitation.

17.130.030 Inspections - Enforcement

It shall be the duty of the Department to enforce the provisions of this Section 17.130. For the purpose of securing enforcement, the Department employees shall have the right and are empowered to enter upon the premises of any Mobile Home Park now operating or which may hereafter be operated within the City to inspect same and all accommodations connected therewith.

17.130.040 Permit - Required

It is unlawful for any person, firm or corporation to operate or maintain or to offer for public use within the City, any Mobile Home Park without applying for and receiving from the City, a permit therefor.

17.130.050 Permit Application; Fee

A. Each applicant for a permit to maintain a Mobile Home Park shall file a written application with the City Clerk, addressed to the City Council, stating:

1. The name and address of the owner or applicant;

2. The name and address of the manager of the Mobile Home Park;

3. The location of the Mobile Home Park;

4. The maximum number of Mobile Homes to be accommodated, together with a Mobile Home Park Master Plan of the Mobile Home Park, as required in Section 17.130.100 herein.

B. Each such application shall be accompanied with an annual inspection fee of $50.00. Such permit shall expire at the end of each calendar year. Permits shall be renewed annually upon payment of an annual inspection fee and compliance with this Section 17.130.050. Permits may be transferred with consent of the City Council upon application for such transfer.

17.130.060 Compliance with Zoning Regulations

No person shall establish or maintain any Mobile Home Park within the City except as may be authorized by this chapter of the Harvard Zoning Ordinance. The owner of the Mobile Home Park and the owner of the Mobile Homes located therein shall be jointly and severally obligated to comply with this Section 17.130 and all subsections thereunder.

17.130.070 Mobile Homes in Mobile Home Parks Only

No Mobile Home shall be permitted to be located on any Site or location in the City other than a City permitted Mobile Home Park.

17.130.080 Compliance with State Statutes Required

In compliance with the provisions of this Section 17.130.080, it shall be the duty of the Mobile Home Park owner and manager and owner of any Mobile Home to comply fully with the provisions of the "Mobile Home Park Act" 210 ILCS 115 et seq., and the "Illinois Mobile Home Tiedown Act" 210 ILCS 120 et seq.

17.130.090 Regulations

A. Drainage. All areas of the Mobile Home Park shall be drained to prevent ponding of water. If deemed necessary by the City, a storm drainage system shall be installed. In addition, the Mobile Home Park shall comply with the City's ordinances including, but not limited to, those relating to water retention and soil erosion.

B. Manager. Every Mobile Home park shall be managed by a responsible individual whose name, address and telephone number shall be on file at all times with the City, and whose duty it shall be to maintain the Mobile Home Park, its facilities and equipment in a clean, orderly and sanitary condition, and shall be responsible, with the Mobile Home Park owner, for any violation of the provisions of this Section 17.130.

C. Minimum Sites; Access. Each Mobile Home Site shall have a minimum area of 4,000 square feet and a minimum street frontage of 40 linear feet for each Site. No Mobile Home Park shall exceed a density of eight Sites per gross acre. Mobile Home Sites shall be located at least five feet from the Mobile Home Park property line, 10 feet from public or private streets, alleys, buildings or other Mobile Homes, and shall not extend over a sidewalk. All portions of sheds, carports, garages, porches and similar structures shall be at least four feet from the Mobile Home Park property line, five feet from any other structure or adjacent Sites, and 10 feet from all streets.

D. Location of Mobile Homes. Mobile Homes shall be located equidistant and parallel to each other in an orderly fashion.

E. Identification of Sites. All Sites shall be uniformly identified with a legible reflective or contrasting number or letter a minimum of three inches in height. This identification shall be at the same location for each Site and visible from the street. There shall be a sequential order for the identification of the Sites. Previous addresses on Mobile Homes shall be

removed. Street signs shall identify all streets that have names. The Mobile Home Park owner or manager shall prepare and maintain an address system plan. A copy of the address system plan shall be provided to the City and the Fire District prior to any permit being issued or renewed. All electrical and natural gas meters must be identified for the Site for which it serves and shown on the Mobile Home Park Master Plan as required herein.

F. Foundations; Tie-Downs. Every Mobile Home shall be secured to the ground in compliance with the provisions of the Illinois Mobile Home Tiedown Act, 210 ILCS 120/1 et seq. Every Mobile Home installed after the effective date of this ordinance shall be placed upon a permanent foundation with wheels, tongues and hitch removed. The owners of every Mobile Home Park in existence as of December 26, 1997, shall cause the trailer hitch and exposed frame to be uniformly cleaned and painted and cause a reflector to be affixed thereupon.

G. Streets; Parking.

1. All streets shall be maintained reasonably free of potholes, snow, ice and dust. Streets shall be constructed of asphalt or concrete.

2. The minimum road with, measured in feet, shall be as follows:

	One Way Traffic	Two Way Traffic
No Parking on Streets	18	24
Parking on Streets	24	30
Parking on Both Sides	30	36

3. At least two off-street parking spaces shall be provided for each Site.

4. Street lighting shall conform to the Index of Engineering Standards of the Harvard Municipal Code.

H. Sanitary Sewer, Stormwater and Potable Water Mains. Each Mobile Home Park shall have sanitary, stormwater and potable water mains in conformance with the Harvard Municipal Code. Each Mobile Home shall be connected to the sanitary sewer and potable water mains of the Mobile Home Park.

I. Electrical Connections. An electrical connection for each Site shall be provided, and the installation shall be in compliance with all state and local electrical codes and ordinances.

J. Fuel Supply. A natural gas connection for each Site shall be provided and the installation shall be in compliance with all state and local codes and ordinances. Except for use with outdoor gas grills, propane gas as a source of fuel is expressly prohibited.

K. Fire and Life Safety.

1. Bales of straw or other flammable materials shall not be used for skirting or insulation of the Mobile Home.

2. Garages, carports, porches, awnings, sheds, skirting and other similar appurtenances shall be constructed in compliance with applicable City building and fire codes.

3. Every Mobile Home Park shall have an evacuation plan, a copy of which is given to each Mobile Home owner and is on file with the Police Department and Fire District and in the Mobile Home Park manager's office.

4. Every Mobile Home Park shall provide or make available a sufficient number of storm shelters to serve the Mobile Home Park population which shall be accessible to provide protection in the event of a natural disaster. The location of these storm shelters shall be indicated on the evacuation plan referred to in Section 17.130.090-K above.

L. Garbage Storage; Disposal. Each Mobile Home shall provide for its own refuse and garbage removal. Garbage and rubbish shall be disposed of in a manner which does not create a nuisance.

M. Insect/Rodent Control. Adequate insect and rodent control measures shall be employed. All Mobile Homes shall be fly and rodent proof and rodent harborages shall not be permitted to exist in the Mobile Home Park or pathways.

N. Recreation Space. The Mobile Home Park owner shall provide a minimum of six percent of the gross area of the Mobile Home Park for recreational facilities. This Recreational Space area shall consist of one contiguous parcel. This space shall be designated on the Mobile Home Park Master Plan referred to in Section 17.130.100 herein.

O. Rules and Regulations. Every Mobile Home Park owner shall adopt written Rules and Regulations outlining the Mobile Home owner's responsibilities under this Section 17.130.090. These rules shall be distributed to each Mobile Home owner and to the City.

17.130.100 Mobile Home Park Master Plan

The Mobile Home Park Master Plan, which shall be filed with the City and the Fire District at the time a permit application is filed and application for a conditional use permit in the event of new Mobile Home Parks, shall contain the following information.

A. Layout of existing and proposed Sites for Mobile Homes;

B. Buildings (and their purpose identified);

C. Streets;

D. Utilities (storm sewer mains, sanitary sewer mains, potable water mains, electrical and natural gas lines);

E. Driveways;

F. Proposed and existing locations for garages, carports, porches, sheds, refuse enclosures and any other accessory buildings;

G. Addresses for each Site;

H. Evacuation plan; and

I. Recreation space.

Whenever any of the information contained in the Mobile Home Park Master Plan is proposed to be amended, a proposed revised copy shall be filed with the City.

17.130.110 Amortization Schedule

A. All Mobile Home Parks in existence at the date of this Ordinance, shall have six months from December 26, 1997, to comply with the provisions of this Section 17.130:

1. Section 17.130.080, Compliance with State Statues;

2. Section 17.130.090-B, Manager;

3. Section 17.130.090-E, Identification of Sites;

4. Section 17.130.090-G 1, Streets; Parking;

5. Section 17.130.090-H, Sanitary Sewer, Stormwater and Potable Water Mains;

6. Section 17.130.090-I, Electrical Connections;

7. Section 17.130.090-J, Fuel Supply;

8. Section 17.130.090-K 1,3 and 4, Fire and Life Safety;

9. Section 17.130.090-L, Garbage Storage; Disposal;

10. Section 17.130.090-M, Insect/Rodent Control;

11. Section 17.130.090-0, Rules and Regulations;

12. With regard to Section 17.130.100, the Mobile Home Park Master Plan; provided, however, said Plan may be a draft with the final draft submitted to the City within 12 months from the effective date of this Section 17.130.

B. All Mobile Home Parks in existence at the date of this Ordinance, shall have twelve months from December 26, 1997, to comply with the provisions of this Section 17.130:

1. Section 17.130.090-F, Foundation; Tie-Downs;

2. Section 17.130.090-K 2, Fire and Life Safety;

3. Section 17.130.090-G 2, Streets; Parking.

17.130.120 Penalty

Any person, firm or corporation violating any provision of this Section 17.130 shall be fined not less than $750.00 for each offense plus the costs of prosecution incurred by the City including reasonable attorney's fees. A separate offense shall be deemed committed on each day during or on which a violation exists.

In addition, any permit granted hereunder shall be subject to suspension or revocation for violation of the provisions of this Section 17.130 or any other ordinances of the City.